NON-CONTROLLED COPY

INFORMATION SUBJECT TO CHANGE WITHOUT NOTICE

VERIFY REV LEVEL OF PAPER COPY WITH REV LEVEL ON PPC WEB SITE

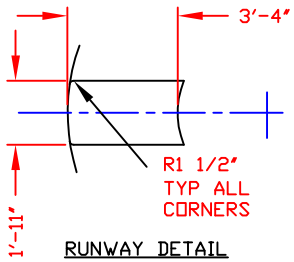

RUNWAY DETAIL
(5) PLACES

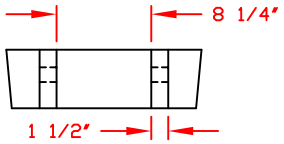

LIFTING LUG DETAIL
(4) PLACES
SCALE: 1"=1'-0"

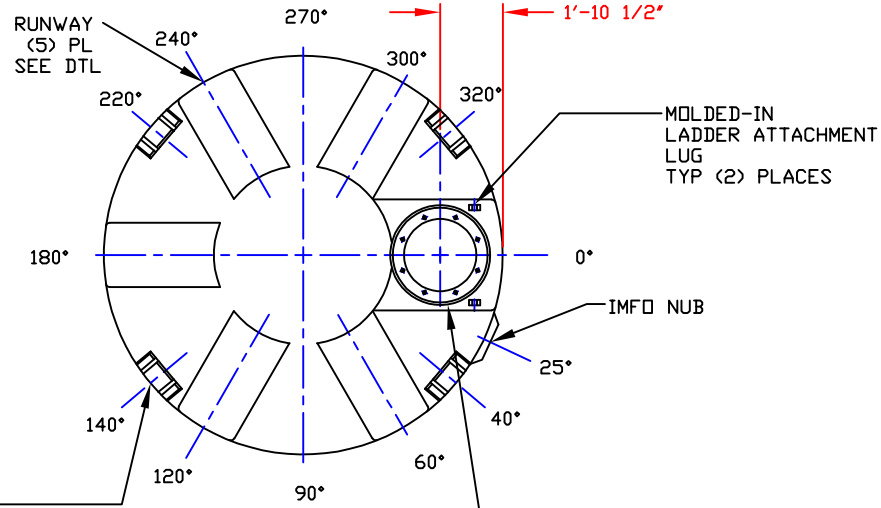

NOZZLE SCHEDULE & ACCESSORIES

SERVICE	MK	STOCK NO.	SIZE	FITTING	DEG	ELEV

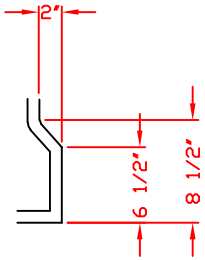

IMFO NUB DETAIL
SCALE: NONE

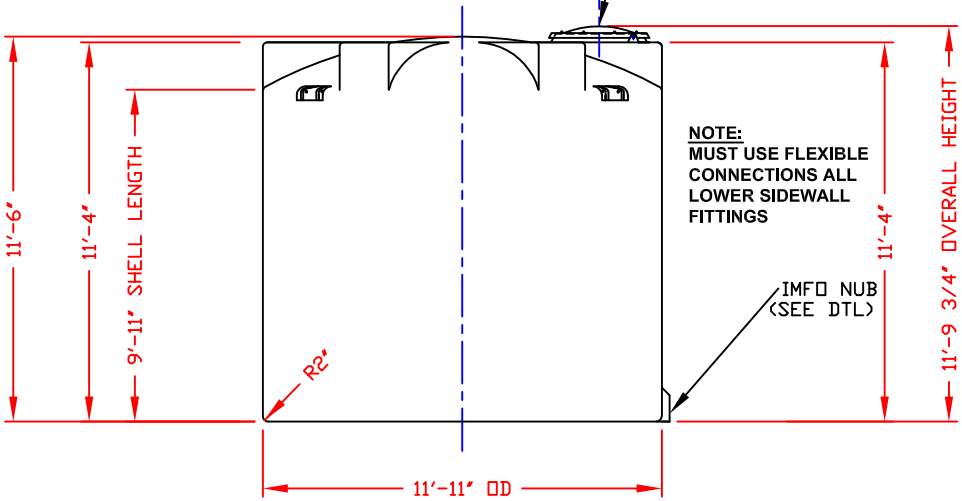

NOTE:
MUST USE FLEXIBLE CONNECTIONS ALL LOWER SIDEWALL FITTINGS

NOTES:
1. THIS IS A COMPUTER GENERATED DWG. DO NOT REVISE BY HAND.
2. DIMENSIONS WILL VARY ±3% DUE TO VARIATIONS IN MULTIPLE MOLDS & CONDITIONS PREVALENT DURING MANUFACTURE & USAGE.
3. 5 1/2" WIDE MOLDED IN GALLONAGE MARKERS @ APPROX 19° UP TO 8100 GAL

CALCULATED CAPACITIES/ VOLUME IN U.S. GALLONS		
DESIGN CAP	DOME VOL	TOTAL VOL
8115	675	8790

CONFIDENTIAL PROPERTY OF POLY PROCESSING COMPANY NOT FOR REPRINT OR USE WITHOUT PERMISSION

DWG TITLE: 8100 GALLON UPRIGHT TANK

SCALE: 1/4"=1'-0"

DATE: 10/10/19

POLYPROCESSING SOLUTIONS, SIMPLIFIED.

Central Region
P.O. Box 4159 (71211)
2201 Old Sterlington Rd.
Monroe, LA 71203
(318) 343-7565
FAX (318) 343-8795

DR: B. HARPER

CK:

SHEET	COMPUTER FILE	REV
1 OF 1	VERT-08100	–

B-25