NON-CONTROLLED COPY

INFORMATION SUBJECT TO CHANGE WITHOUT NOTICE

VERIFY REV LEVEL OF PAPER COPY WITH REV LEVEL ON PPC WEB SITE

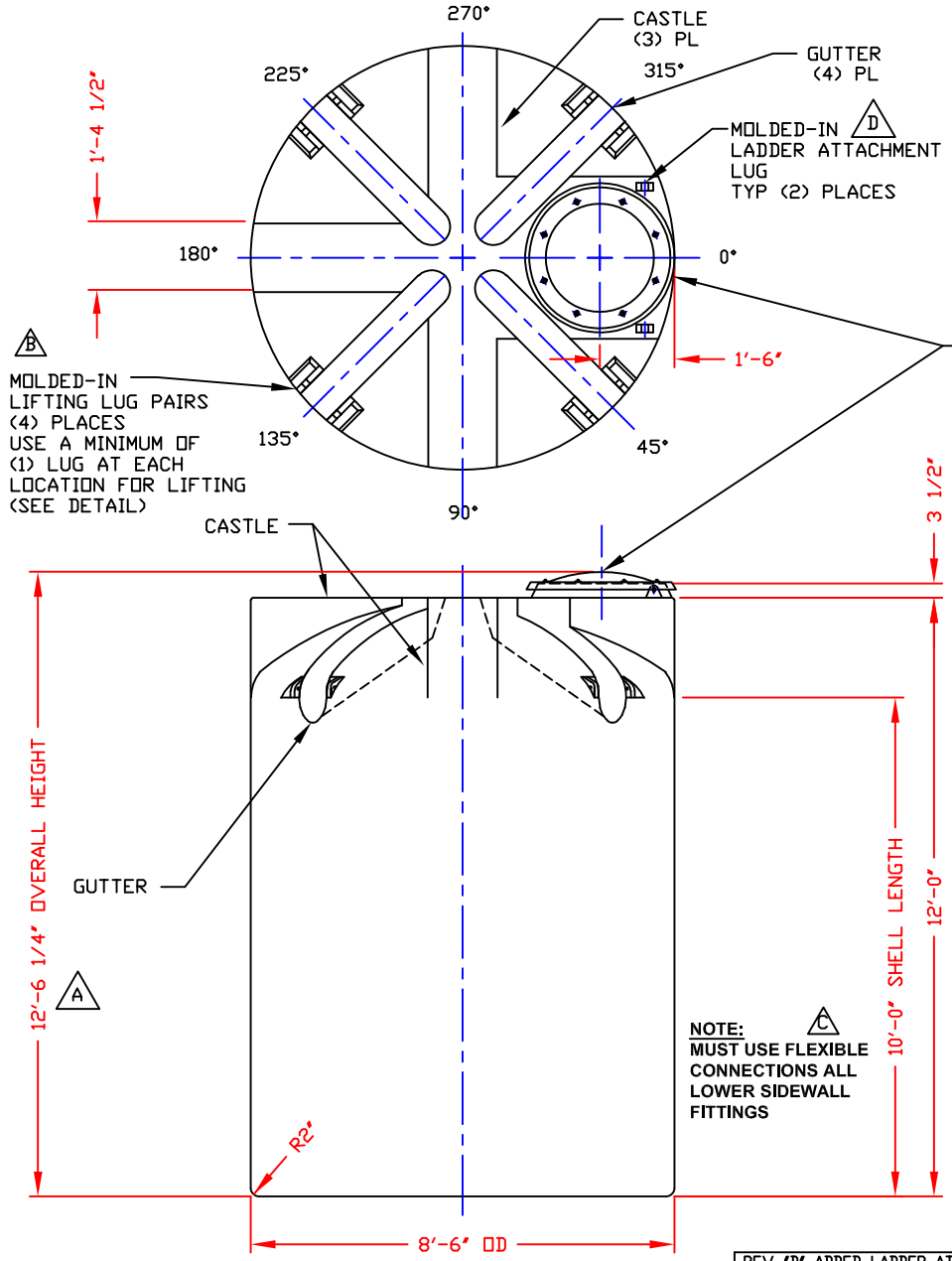

NOTE:
C
MUST USE FLEXIBLE CONNECTIONS ALL LOWER SIDEWALL FITTINGS

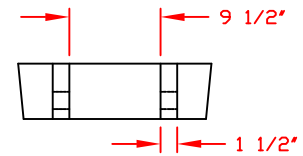

LIFTING LUG DETAIL
(4) PLACES
SCALE: NONE

NOZZLE SCHEDULE & ACCESSORIES

SERVICE	MK	STOCK NO.	SIZE	FITTING	DEG	ELEV

NOTES
1. THIS IS A COMPUTER GENERATED DWG. DO NOT REVISE BY HAND.
2. DIMENSIONS WILL VARY ±3% DUE TO VARIATIONS IN MULTIPLE MOLDS & CONDITIONS PREVALENT DURING MANUFACTURE & USAGE.
3. NO MOLDED IN GALLONAGE MARKERS THIS TANK.

CALCULATED CAPACITIES/ VOLUME IN U.S. GALLONS

DESIGN CAP	DOME VOL	TOTAL VOL
4162	245	4407

CONFIDENTIAL PROPERTY OF POLY PROCESSING COMPANY NOT FOR REPRINT OR USE WITHOUT PERMISSION

DWG TITLE: 4150 GALLON UPRIGHT TANK

SCALE: 3/8"=1'-0"

DATE: 10/10/19

POLYPROCESSING SOLUTIONS, SIMPLIFIED.

Central Region
P.O. Box 4159 (71211)
2201 Old Sterlington Rd.
Monroe, LA 71203
(318) 343-7565
FAX (318) 343-8795

DR: B. HARPER

CK:

SHEET	COMPUTER FILE	REV
1 OF 1	VERT-04150	D

REV "D" ADDED LADDER ATTACHMENT LUGS BY:JB 7/8/04 CK:WM
REV "C" ADDED FITTING NOTE BY:MBW 2/17/03 CK:JB
REV "B" ADDED LIFTING LUGS & DETAIL BY:JB 1/16/03 CK:WM
REV "A" ADDED DIMENSION BY:JB 10/18/02 CK:MBW

B-375