NON-CONTROLLED COPY

INFORMATION SUBJECT TO CHANGE WITHOUT NOTICE

VERIFY REV LEVEL OF PAPER COPY WITH REV LEVEL ON PPC WEB SITE

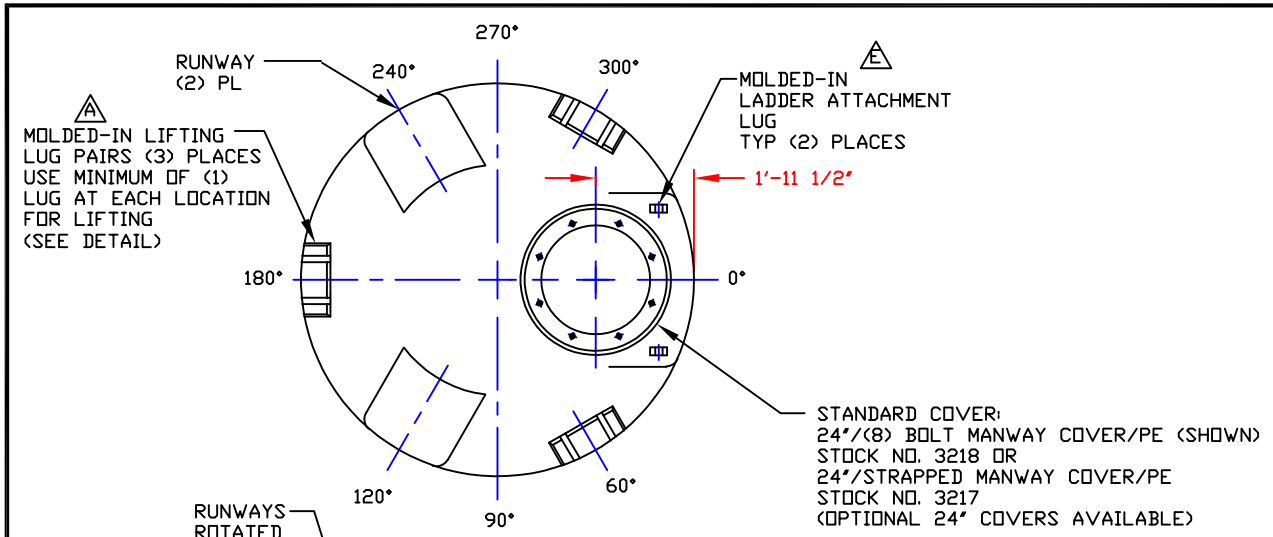

NOZZLE SCHEDULE & ACCESSORIES

SERVICE	MK	STOCK NO.	SIZE	FITTING	DEG	ELEV

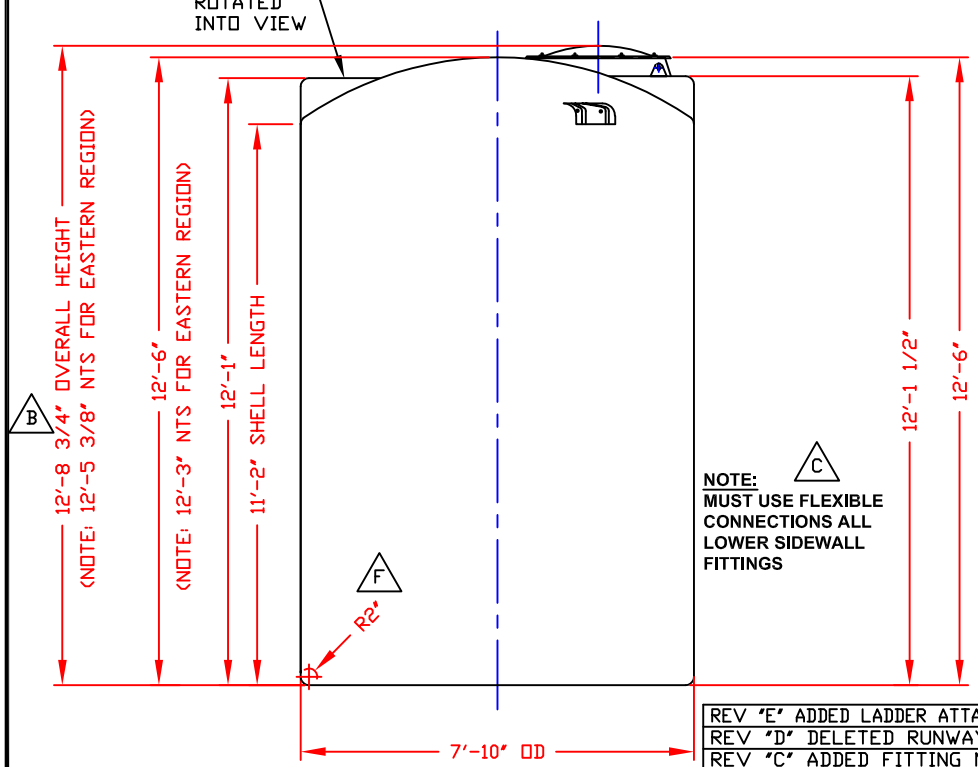

C

NOTE:
MUST USE FLEXIBLE CONNECTIONS ALL LOWER SIDEWALL FITTINGS

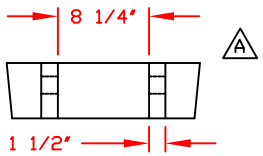

LIFTING LUG DETAIL
(3) PLACES
SCALE: 1"=1'-0"

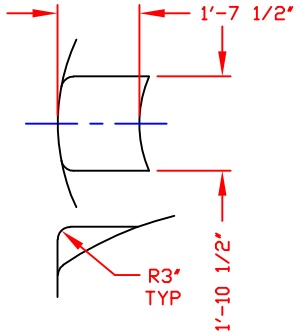

D RUNWAY DETAIL
(2) PLACES
SCALE: 1'-0"=1'-0"

NOTES
1. THIS IS A COMPUTER GENERATED DWG. DO NOT REVISE BY HAND.
2. DIMENSIONS WILL VARY ±3% DUE TO VARIATIONS IN MULTIPLE MOLDS AND CONDITIONS PREVELANT DURING MANUFACTURE AND USAGE.
3. MOLDED IN GALLONAGE MARKERS IN 200 GAL. INCREMENTS UP TO 4000 GAL. IN MANWAY AREA.

CALCULATED CAPACITIES/ VOLUME IN U.S. GALLONS		
DESIGN CAP	DOME VOL	TOTAL VOL
3939	192	4131

CONFIDENTIAL PROPERTY OF POLY PROCESSING COMPANY NOT FOR REPRINT OR USE WITHOUT PERMISSION

DWG TITLE: 3900 GALLON UPRIGHT TANK

SCALE: 3/8"=1'-0"

DATE: 10/10/19

PolyProcessing
SOLUTIONS, SIMPLIFIED.
Central Region
P.O. Box 4159 (71211)
2201 Old Sterlington Rd.
Monroe, LA 71203
(318) 343-7563
FAX (318) 343-8795

DR: B. HARPER

CK:

SHEET: 1 OF 1

COMPUTER FILE: VERT-03900

REV: F

REV "E" ADDED LADDER ATTACHMENT LUGS BY:JB 9/8/04 CK:WM
REV "D" DELETED RUNWAY NOTE BY:JB 8/21/03 CK:MBW
REV "C" ADDED FITTING NOTE BY:MBW 2/17/03 CK:JB
REV "B" ADDED DIMENSION BY:JB 10/18/02 CK:MBW
REV "A" ADDED LIFTING LUGS & DETAIL BY:JB 9/25/02 CK:WM
REV "F" CHANGED KNUCKLE RADIUS TO 2" BY:BT 5/30/12 CK:WM

B-375