NON-CONTROLLED COPY

INFORMATION SUBJECT TO CHANGE WITHOUT NOTICE

VERIFY REV LEVEL OF PAPER COPY WITH REV LEVEL ON PPC WEB SITE

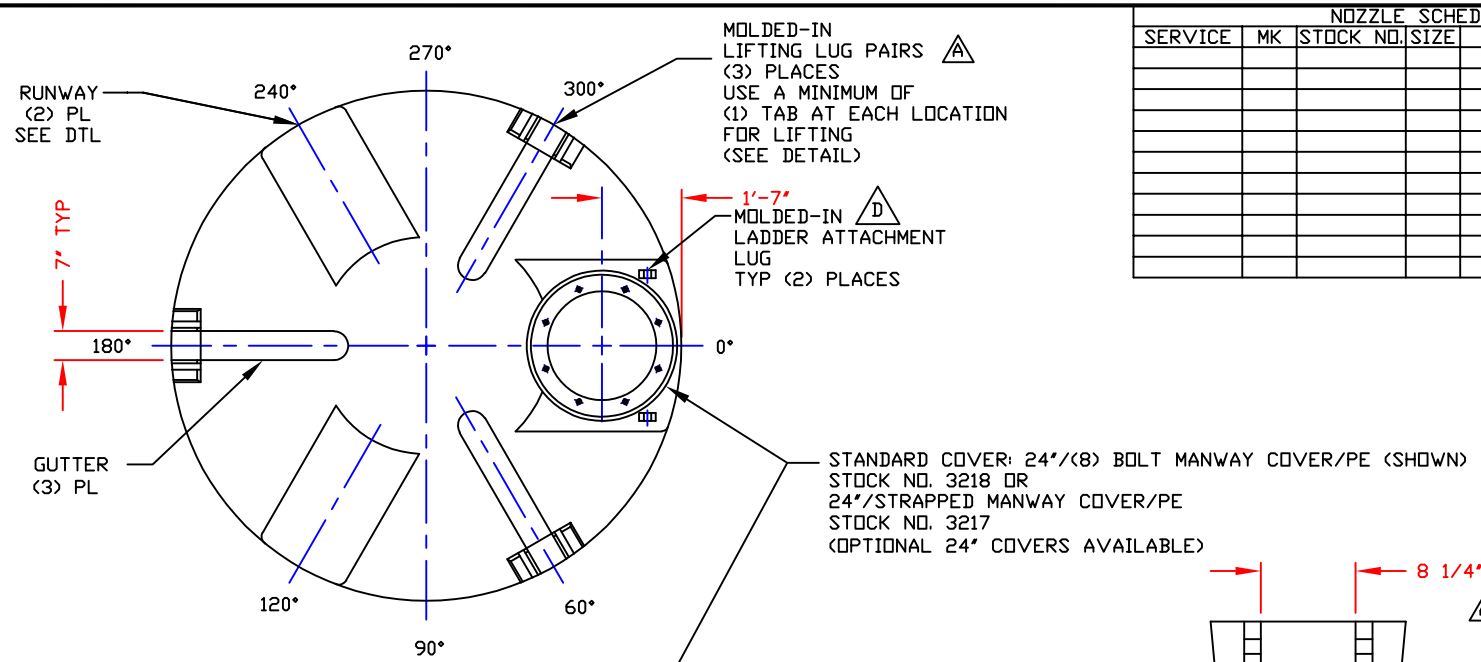

NOZZLE SCHEDULE & ACCESSORIES						
SERVICE	MK	STOCK NO.	SIZE	FITTING	DEG	ELEV

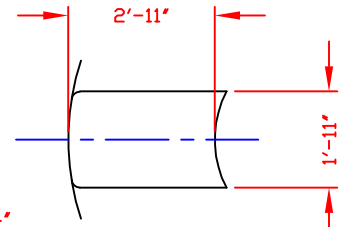

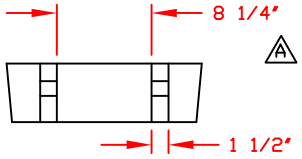

LIFTING LUG DETAIL
(3) PLACES
SCALE: 1"=1'-0"

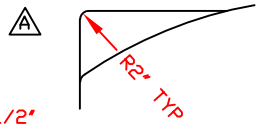

RUNWAY DETAIL
(2) PLACES

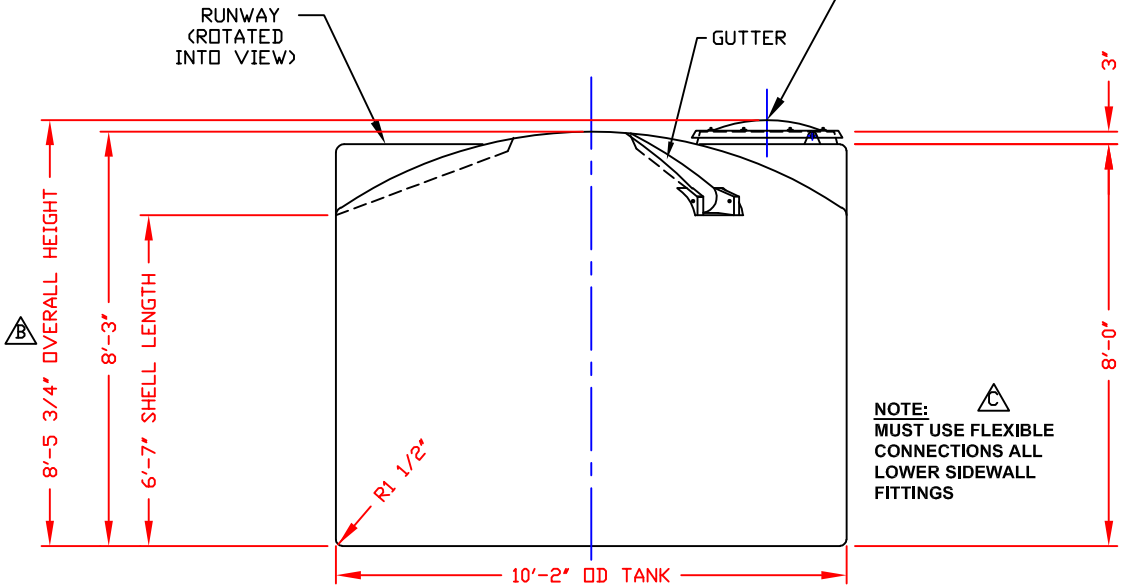

NOTE: C
MUST USE FLEXIBLE CONNECTIONS ALL LOWER SIDEWALL FITTINGS

NOTES
1. THIS IS A COMPUTER GENERATED DWG. DO NOT REVISE BY HAND.
2. NO MOLDED IN GALLONAGE MARKERS THIS TANK.
3. DIMENSIONS WILL VARY ±3% DUE TO VARIATIONS IN MULTIPLE MOLDS & CONDITIONS PREVALENT DURING MANUFACTURE & USAGE.

CALCULATED CAPACITIES/ VOLUME IN U.S. GALLONS		
DESIGN CAP	DOME VOL	TOTAL VOL
3944	419	4363

CONFIDENTIAL PROPERTY OF POLY PROCESSING COMPANY NOT FOR REPRINT OR USE WITHOUT PERMISSION

DWG TITLE: 3850 GALLON UPRIGHT TANK

SCALE: 3/8"=1'-0"

DATE: 10/10/19

PolyProcessing
SOLUTIONS, SIMPLIFIED.
Central Region
P.O. Box 4159 (71211)
2201 Old Sterlington Rd.
Monroe, LA 71203
(318) 343-7565
FAX (318) 343-8795

DR: B. HARPER

CK:

SHEET: 1 OF 1

COMPUTER FILE: VERT-03850

REV: D

REV	DESCRIPTION	BY	DATE	CK
D	ADDED LADDER ATTCH LUGS	JB	9/10/12	CD
C	ADDED FITTING NOTE	MBW	2/17/03	JB
B	ADDED DIMENSION	JB	10/18/02	MBW
A	ADDED LIFTING LUGS & DETAILS	JB	5/7/02	MBW