NON-CONTROLLED COPY

INFORMATION SUBJECT TO CHANGE WITHOUT NOTICE

VERIFY REV LEVEL OF PAPER COPY WITH REV LEVEL ON PPC WEB SITE

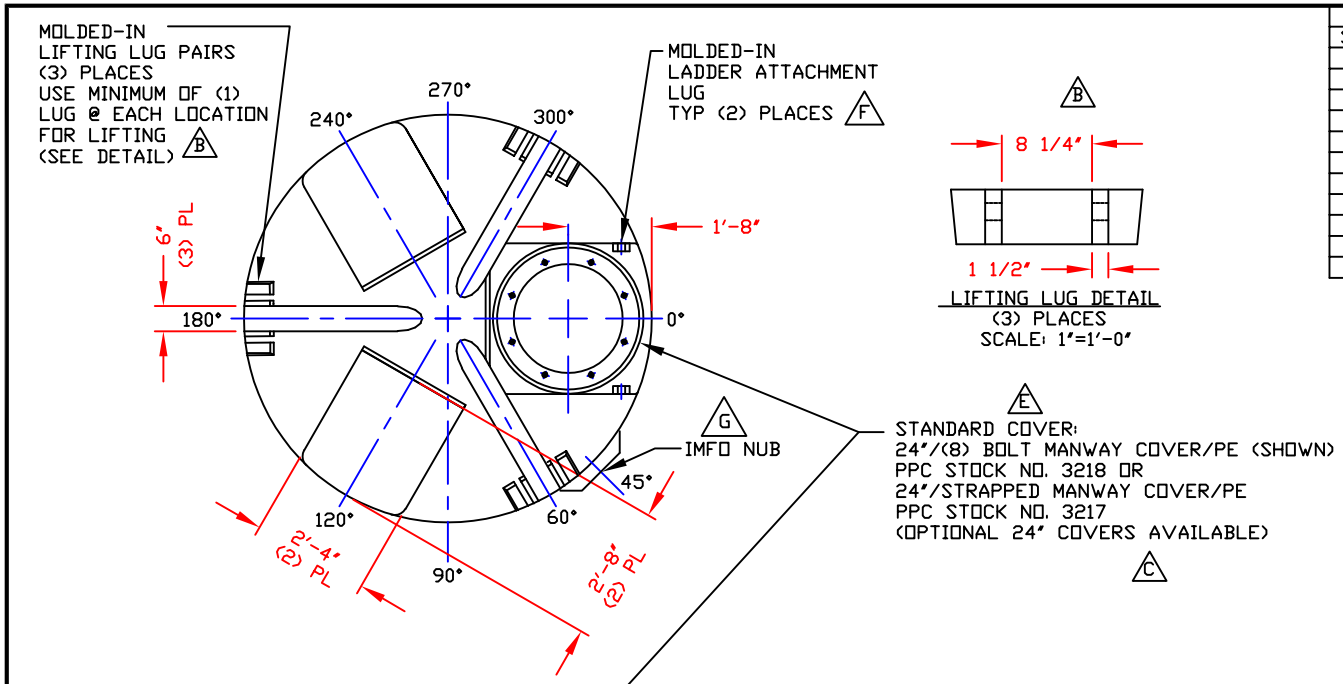

NOZZLE SCHEDULE & ACCESSORIES						
SERVICE	MK	STOCK NO.	SIZE	FITTING	DEG	ELEV

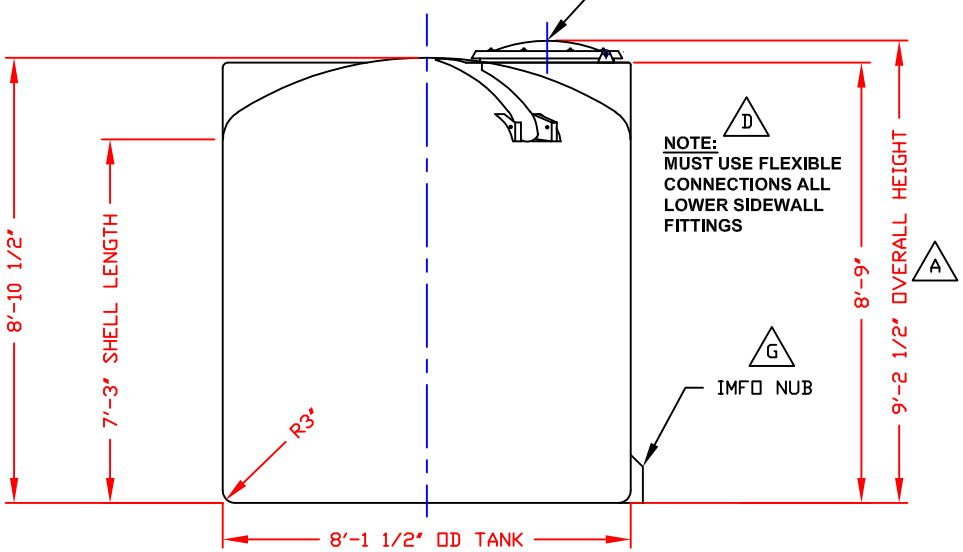

NOTES

1. THIS IS A COMPUTER GENERATED DWG. DO NOT REVISE BY HAND.
2. DIMENSIONS WILL VARY ±3% DUE TO VARIATIONS IN MULTIPLE MOLDS & CONDITIONS PREVALENT DURING MANUFACTURE & USAGE.
3. NO MOLDED IN GALLONAGE MARKERS THIS TANK.

CONFIDENTIAL PROPERTY OF
POLY PROCESSING COMPANY
NOT FOR REPRINT OR USE
WITHOUT PERMISSION

CALCULATED CAPACITIES/ VOLUME IN U.S. GALLONS		
DESIGN CAP	DOME VOL	TOTAL VOL
2796	372	3168

REV "G" ADDED IMFO NUB BY:JB 6/14/10 CK:WM
REV "F" ADDED LADDER ATTACHMENT LUGS BY:JB 2/3/05 CK:WM
REV "E" REVISED MANWAY COVER BY:JB 2/3/05 CK:WM
REV "D" ADDED FITTING NOTE BY:JB 2/5/03 CK:MBW
REV "C" REVISED STOCK NUMBER BY:JB 1/23/03 CK:WM
REV "B" ADDED LIFTING LUGS & DETAIL BY:JB 1/23/03 CK:WM
REV "A" ADDED DIMENSION BY:JB 10/18/02 CK:MBW

DWG TITLE

2750 GALLON UPRIGHT TANK

SCALE: 3/8"=1'-0"

DATE: 10/17/19

PolyProcessing
SOLUTIONS, SIMPLIFIED.
Western Region
P.O. Box 80
8055 South Ash Street
French Camp, CA 95231
(209) 982-4994
FAX (209) 982-0455

DR: B. HARPER

CK:

SHEET	COMPUTER FILE	REV
1 OF 1	VERT-02750	G

B-375