NON-CONTROLLED COPY

INFORMATION SUBJECT TO CHANGE WITHOUT NOTICE

VERIFY REV LEVEL OF PAPER COPY WITH REV LEVEL ON PPC WEB SITE

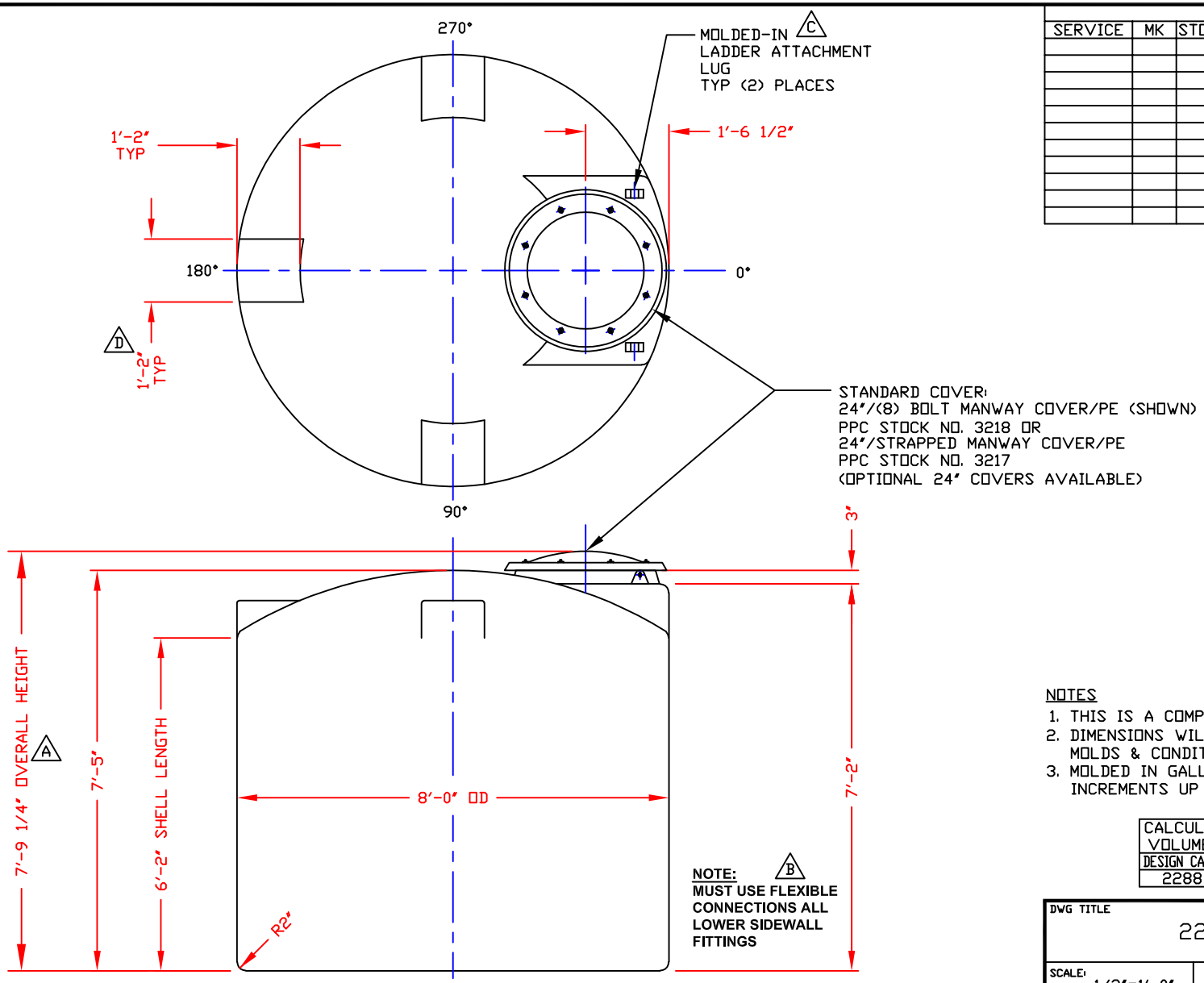

NOZZLE SCHEDULE & ACCESSORIES

SERVICE	MK	STOCK NO.	SIZE	FITTING	DEG	ELEV

NOTES

1. THIS IS A COMPUTER GENERATED DWG. DO NOT REVISE BY HAND.
2. DIMENSIONS WILL VARY ±3% DUE TO VARIATIONS IN MULTIPLE MOLDS & CONDITIONS PREVALENT DURING MANUFACTURE & USAGE.
3. MOLDED IN GALLONAGE MARKERS IN MANWAY AREA IN 200 GAL INCREMENTS UP TO 2000 GAL.

CALCULATED CAPACITIES/ VOLUME IN U.S. GALLONS

DESIGN CAP	DOME VOL	TOTAL VOL
2288	204	2492

CONFIDENTIAL PROPERTY OF POLY PROCESSING COMPANY NOT FOR REPRINT OR USE WITHOUT PERMISSION

REV		
"D"	ADDED FTG FLATS TO DOME	BY:JB 2/18/13 CK:WM
"C"	ADDED LADDER ATTACHMENT LUGS	BY:JB 7/8/04 CK:WM
"B"	ADDED FITTING NOTE	BY:MBW 2/17/03 CK:JB
"A"	ADDED DIMENSION	BY:JB 10/18/02 CK:MBW

DWG TITLE: 2250 GALLON UPRIGHT TANK

SCALE: 1/2"=1'-0"

DATE: 10/10/19

PolyProcessing
SOLUTIONS, SIMPLIFIED.
Central Region
P.O. Box 4159 (71210)
2201 Old Sterlington Rd.
Monroe, LA 71203
(318) 343-7565
FAX (318) 343-8795

DR: B. HARPER

CK:

SHEET: 1 OF 1

COMPUTER FILE: VERT-02250

REV: D

B-5