NON-CONTROLLED COPY

INFORMATION SUBJECT TO CHANGE WITHOUT NOTICE

VERIFY REV LEVEL OF PAPER COPY WITH REV LEVEL ON PPC WEB SITE

NOZZLE SCHEDULE & ACCESSORIES						
SERVICE	MK	STOCK NO.	SIZE	FITTING	DEG	ELEV

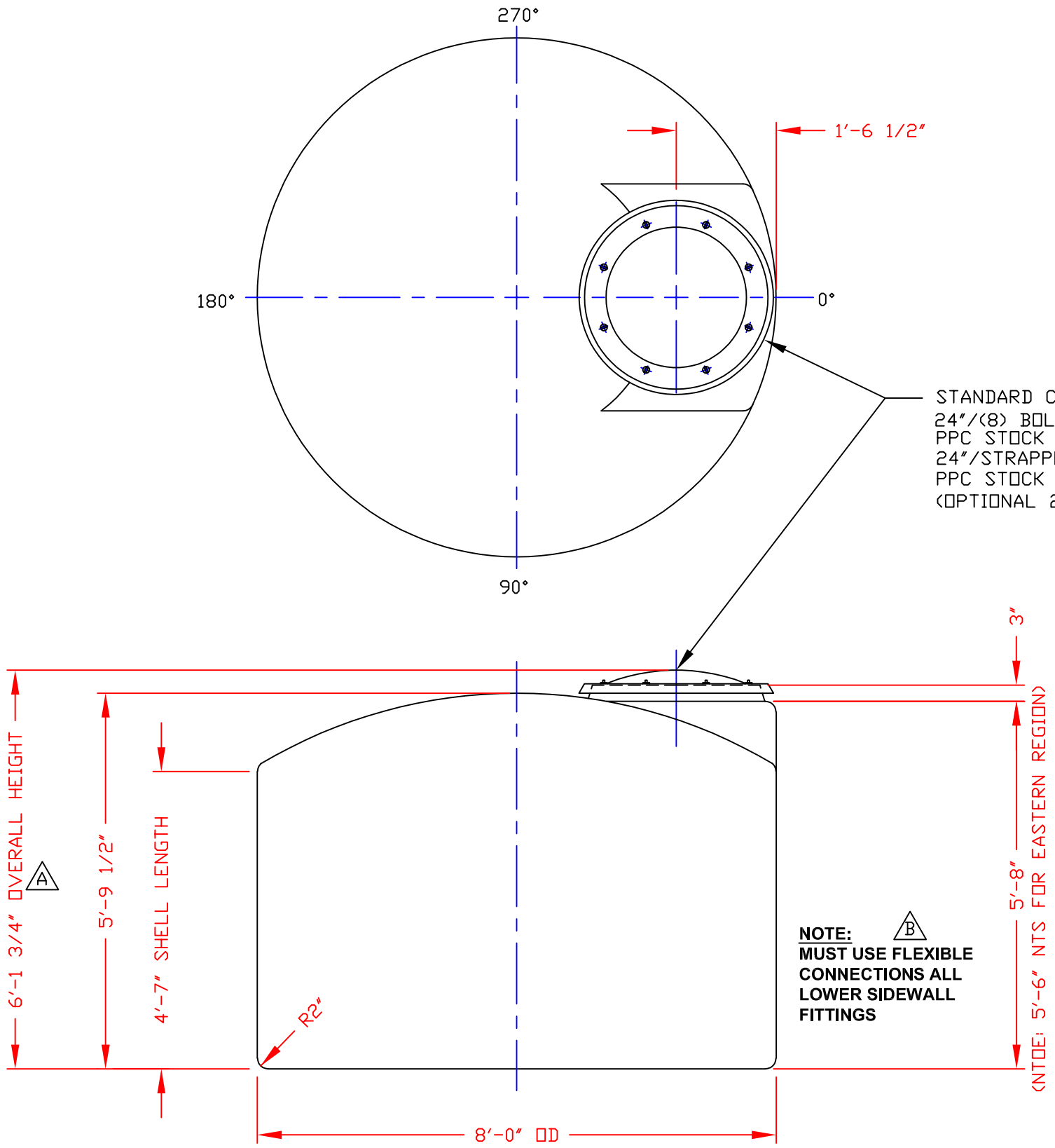

NOTES

1. THIS IS A COMPUTER GENERATED DWG. DO NOT REVISE BY HAND.
2. DIMENSIONS WILL VARY ±3% DUE TO VARIATIONS IN MULTIPLE MOLDS & CONDITIONS PREVALENT DURING MANUFACTURE & USAGE.
3. 5" WIDE MOLDED IN GALLONAGE MARKERS @ APPROX. 12° IN 200 GAL INCREMENTS FROM 100 GAL UP TO 1900 GAL. AVOID WHEN FITTING. CENTRAL REGION.
4. 5" WIDE MOLDED IN GALLONAGE MARKERS @ 0° IN 200 GAL INCREMENTS FROM 100 GAL UP TO 1900 GAL. AVOID WHEN FITTING. EASTERN REGION.
5. CENTRAL REGION TANK HAS PARTING LINE @ 4'-5". PLEASE TAKE INTO CONSIDERATION WHEN PLACING FITTINGS.

CALCULATED CAPACITIES/ VOLUME IN U.S. GALLONS		
DESIGN CAP	DOME VOL	TOTAL VOL
1700	204	1904

CONFIDENTIAL PROPERTY OF POLY PROCESSING COMPANY NOT FOR REPRINT OR USE WITHOUT PERMISSION

DWG TITLE

1700 GALLON UPRIGHT TANK

SCALE: 1/2"=1'-0"

DATE: 10/9/19

POLYPROCESSING SOLUTIONS, SIMPLIFIED.

Central Region
P.O. Box 4150 (71211)
2201 Old Sterlington Rd.
Monroe, LA 71203
(318) 343-7565
FAX (318) 343-8795

DR: B. HARPER

CK:

SHEET	COMPUTER FILE	REV
1 OF 1	VERT-01700	B

REV "B" ADDED FITTING NOTE BY:MBW 2/17/03 CK:JB

REV "A" ADDED DIMENSION BY:JB 10/18/02 CK:MBW

B-5