NON-CONTROLLED COPY

INFORMATION SUBJECT TO CHANGE WITHOUT NOTICE

VERIFY REV LEVEL OF PAPER COPY WITH REV LEVEL ON PPC WEB SITE

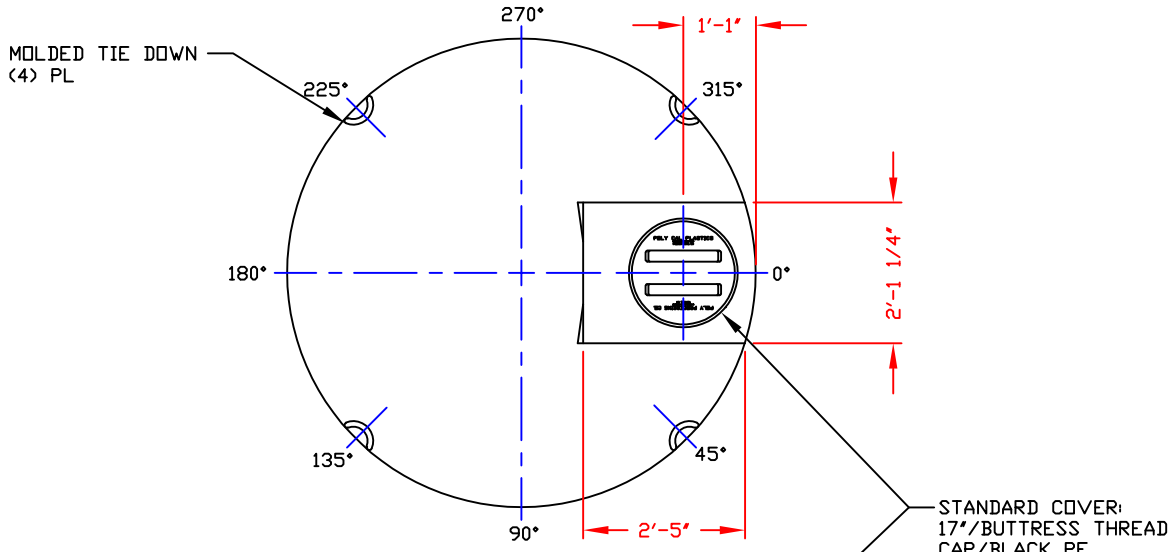

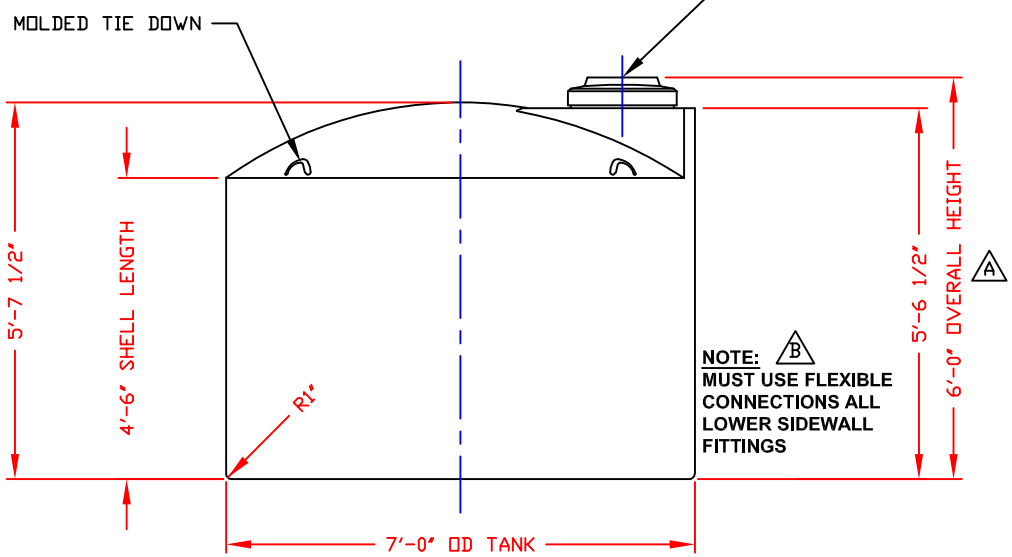

NOTE: B
MUST USE FLEXIBLE CONNECTIONS ALL LOWER SIDEWALL FITTINGS

NOZZLE SCHEDULE & ACCESSORIES

SERVICE	MK	STOCK NO.	SIZE	FITTING	DEG	ELEV

NOTES
1. THIS IS A COMPUTER GENERATED DWG. DO NOT REVISE BY HAND.
2. DIMENSIONS WILL VARY ±3% DUE TO VARIATIONS IN MULTIPLE MOLDS & CONDITIONS PREVALENT DURING MANUFACTURE & USAGE.
3. NO MOLDED IN GALLONAGE MARKERS THIS TANK.

CALCULATED CAPACITIES/ VOLUME IN U.S. GALLONS		
DESIGN CAP	DOME VOL	TOTAL VOL
1282	165	1447

CONFIDENTIAL PROPERTY OF POLY PROCESSING COMPANY NOT FOR REPRINT OR USE WITHOUT PERMISSION

DWG TITLE: 1250 GALLON UPRIGHT TANK

SCALE: 1/2"=1'-0"

DATE: 10/17/19

POLYPROCESSING COMPANY
Western Region
P.O. Box 69
8033 South Ash Street
French Camp, CA 95231
(209) 982-4904
FAX (209) 982-0455

DR: B. HARPER

CK:

SHEET	COMPUTER FILE	REV
1 OF 1	VERT-01250	B

REV "B" ADDED FITTING NOTE BY:JB 3/19/03 CK:MBW
REV "A" ADDED DIMENSION BY:JB 10/15/02 CK:MBW

B-5