NON-CONTROLLED COPY

INFORMATION SUBJECT TO CHANGE WITHOUT NOTICE

VERIFY REV LEVEL OF PAPER COPY WITH REV LEVEL ON PPC WEB SITE

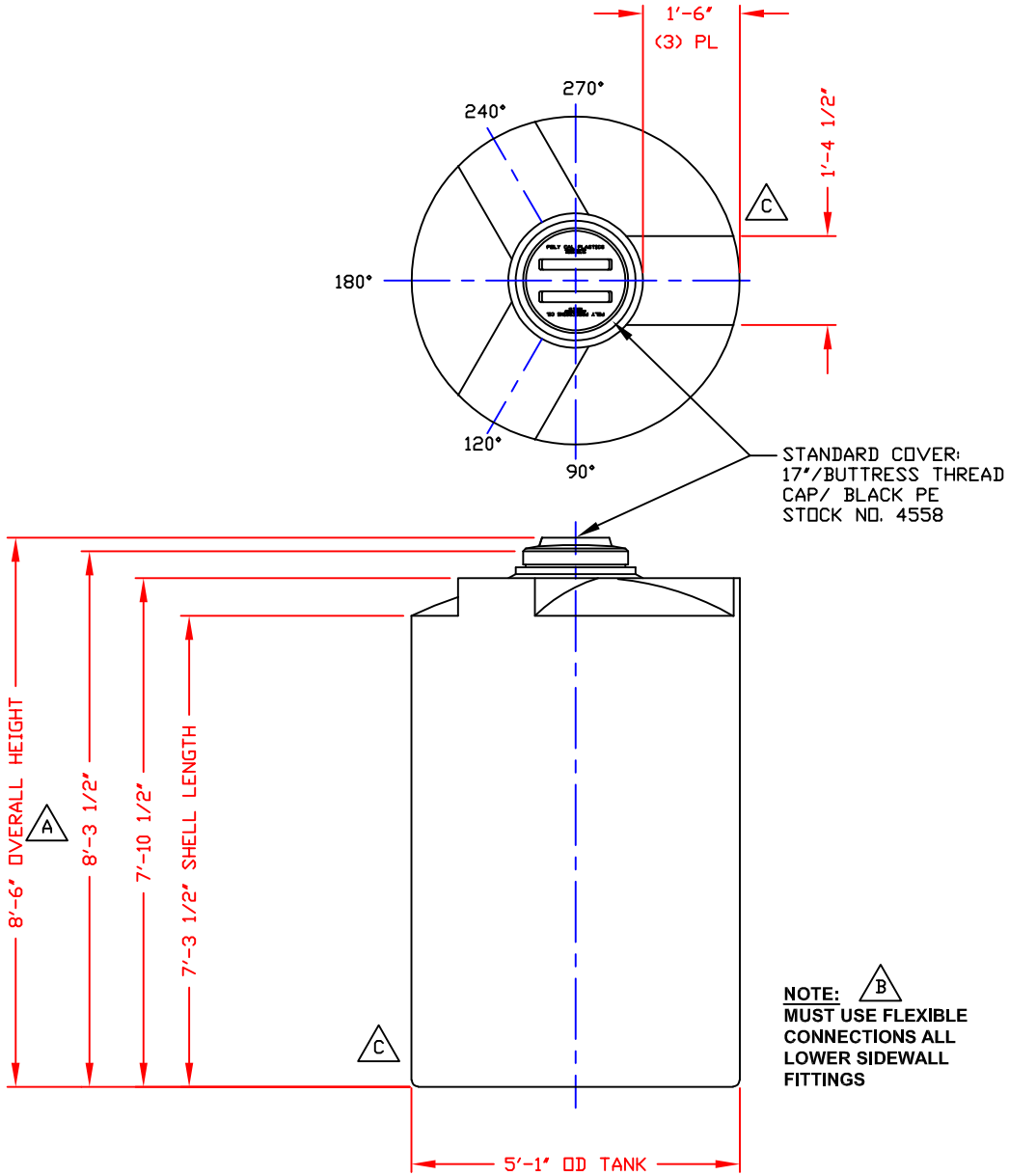

NOZZLE SCHEDULE & ACCESSORIES

SERVICE	MK	STOCK NO.	SIZE	FITTING	DEG	ELEV

NOTES

1. THIS IS A COMPUTER GENERATED DWG. DO NOT REVISE BY HAND.
2. DIMENSIONS WILL VARY ±3% DUE TO VARIATIONS IN MULTIPLE MOLDS & CONDITIONS PREVALENT DURING MANUFACTURE & USAGE.
3. MOLDED IN GALLONAGE MARKERS @ 0° IN 100 GAL INCREMENTS STARTING @ 100 GAL UP TO 900 GAL. AVOID WHEN PLACING FITTINGS.

NOTE: B
MUST USE FLEXIBLE CONNECTIONS ALL LOWER SIDEWALL FITTINGS

CALCULATED CAPACITIES/ VOLUME IN U.S. GALLONS

DESIGN CAP	DOME VOL	TOTAL VOL
1093	45	1138

CONFIDENTIAL PROPERTY OF POLY PROCESSING COMPANY NOT FOR REPRINT OR USE WITHOUT PERMISSION

DWG TITLE: 1090 GALLON UPRIGHT TANK

SCALE: 1/2"=1'-0"

DATE: 10/17/19

POLYPROCESSING SOLUTIONS, SIMPLIFIED.
Western Region
P.O. Box 80
8055 South Ash Street
French Camp, CA 95231
(209) 982-4904
FAX (209) 982-0455

DR: B. HARPER

CK:

SHEET: 1 OF 1

COMPUTER FILE: VERT-01090

REV: C

REV "C" REMOVED FTG FLAT BY:JB 6/24/11 CK:WM
REV "B" ADDED FITTING NOTE BY:JB 3/19/03 CK:MBW
REV "A" ADDED DIMENSION BY:JB 10/15/02 CK:MBW

B-5