NON-CONTROLLED COPY

INFORMATION SUBJECT TO CHANGE WITHOUT NOTICE

VERIFY REV LEVEL OF PAPER COPY WITH REV LEVEL ON PPC WEB SITE

NOZZLE SCHEDULE & ACCESSORIES

SERVICE	MK	STOCK NO.	SIZE	FITTING	DEG	ELEV

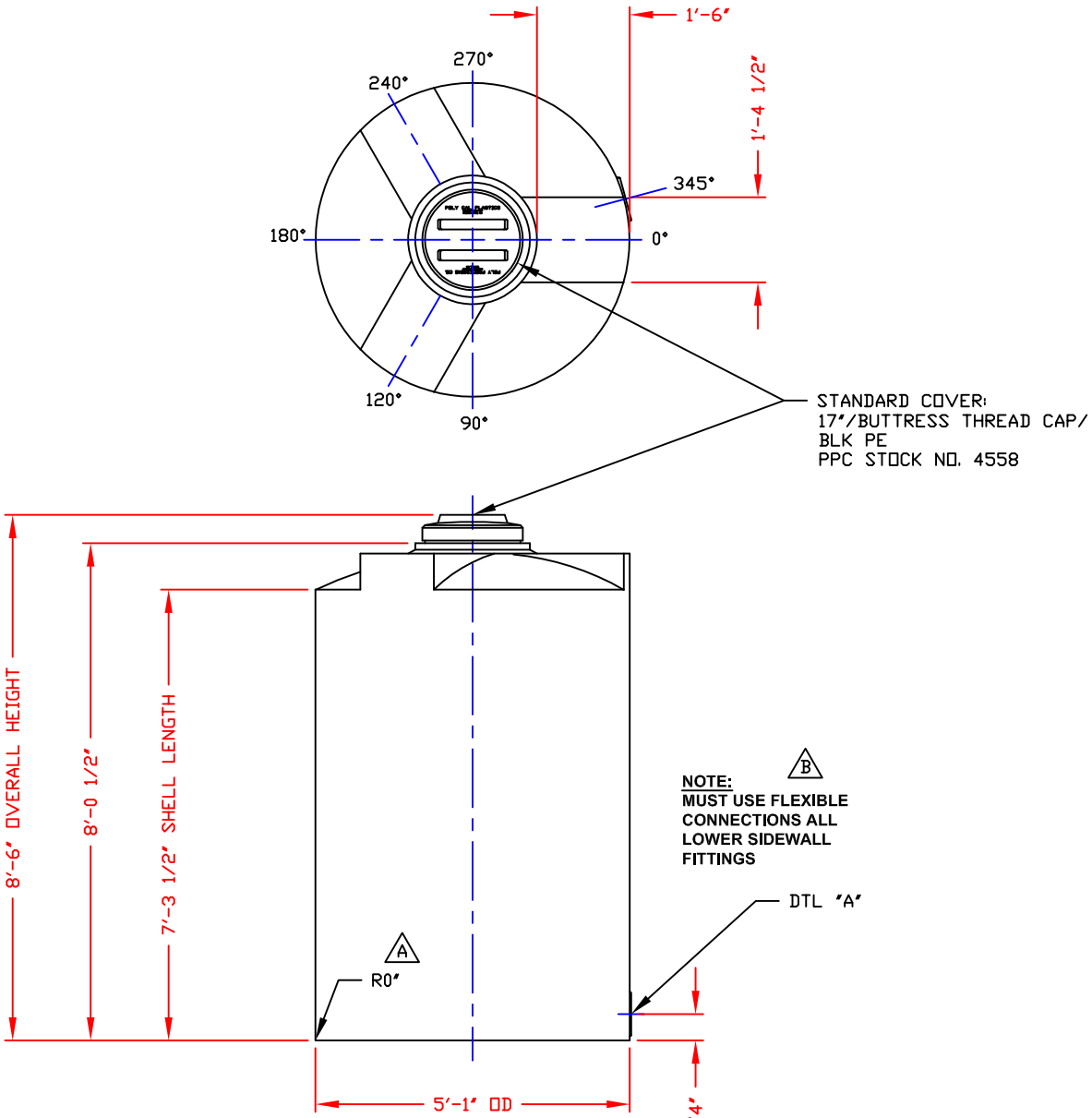

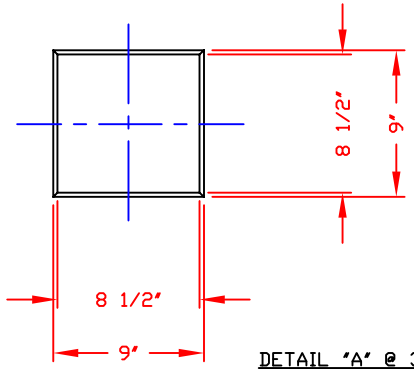

DETAIL "A" @ 345°
SCALE: 1 1/2"=1'-0"

NOTES:
1. THIS IS A COMPUTER GENERATED DWG. DO NOT REVISE BY HAND.
2. DIMENSIONS WILL VARY ±3% DUE TO VARIATIONS IN MULTIPLE MOLDS & CONDITIONS PREVALENT DURING MANUFACTURE & USAGE.
3. MOLDED IN GALLONAGE MARKERS @ 0° IN 100 GAL INCREMENTS FROM 200 GAL TO 900 GAL. AVOID WHEN FITTING.

CALCULATED CAPACITIES/ VOLUME IN U.S. GALLONS		
DESIGN CAP	DOME VOL	TOTAL VOL
1097	52	1149

CONFIDENTIAL PROPERTY OF POLY PROCESSING COMPANY NOT FOR REPRINT OR USE WITHOUT PERMISSION

DWG TITLE: 1050 GALLON UPRIGHT TANK

SCALE: 1/2"=1'-0"

DATE: 10/8/19

POLYPROCESSING SOLUTIONS, SIMPLIFIED.

Central Region
P.O. Box 4159 (71211)
2201 Old Sterlington Rd.
Monroe, LA 71203
(318) 343-7565
FAX (318) 343-8795

DR: B. HARPER

CK:

SHEET	COMPUTER FILE	REV
1 OF 1	VERT-01050	B

REV "B" ADDED FITTING NOTE BY:MBW 2/11/03 CK:JB

REV "A" ADDED RADIUS BY:MBW 2/22/00 CK:DR

B-5