NON-CONTROLLED COPY

INFORMATION SUBJECT TO CHANGE WITHOUT NOTICE

VERIFY REV LEVEL OF PAPER COPY WITH REV LEVEL ON PPC WEB SITE

NOZZLE SCHEDULE & ACCESSORIES

SERVICE	MK	STOCK NO.	SIZE	FITTING	DEG	ELEV

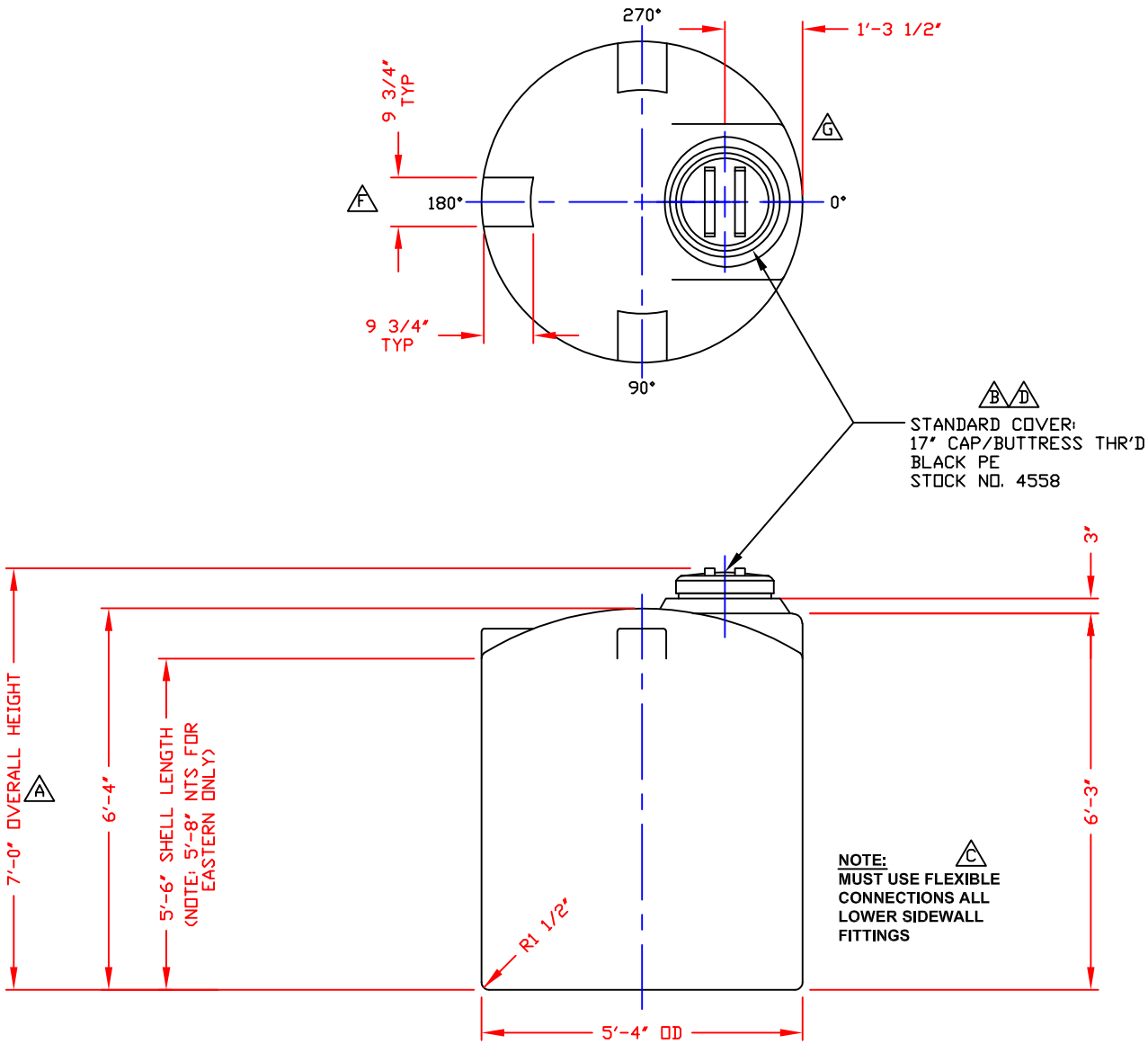

NOTES

1. THIS IS A COMPUTER GENERATED DWG. DO NOT REVISE BY HAND.
2. DIMENSIONS WILL VARY ±3% DUE TO VARIATIONS IN MULTIPLE MOLDS & CONDITIONS PREVALENT DURING MANUFACTURE & USAGE.
3. MOLDED IN GALLONAGE MARKERS @ APPROX. 9" IN 100 GAL INCREMENTS UP TO 900 GAL W/TIC MARKS INBETWEEN. CENTRAL REGION.
4. 5" WIDE MOLDED IN GALLONAGE MARKERS @ APPROX. 13" IN 50 GAL. INCREMENTS UP TO 900 GAL. AVOID WHEN FITTING. EASTERN REGION.

CALCULATED CAPACITIES/ VOLUME IN U.S. GALLONS		
DESIGN CAP	DOME VOL	TOTAL VOL
907	61	968

CONFIDENTIAL PROPERTY OF POLY PROCESSING COMPANY NOT FOR REPRINT OR USE WITHOUT PERMISSION

DWG TITLE: 905 GALLON UPRIGHT TANK

SCALE: 1/2"=1'-0"

DATE: 10/8/19

POLYPROCESSING SOLUTIONS, SIMPLIFIED.
Central Region
P.O. Box 4159 (71211)
2201 Old Sterlington Rd.
Monroe, LA 71203
(318) 343-7563
FAX (318) 343-8795

DR: B. HARPER

CK:

SHEET: 1 OF 1

COMPUTER FILE: VERT-00905

REV: G

REV "G" REVISED MWY CONFIGURATION BY:JB1 8/12/13 CK:WM	REV "D" REVISED COVER BY:JB 7/24/09 CK:WM
REV "F" ADDED FTG FLATS TO DOME BY:JB 12/5/12 CK:WM	REV "C" ADDED FITTING NOTE BY:MBW 2/11/03 CK:JB
REV "E" REVISED MANWAY CONFIGURATION BY:JB 1/6/11 CK:WM	REV "B" REVISED LID BY:MBW 2/11/03 CK:JB
	REV "A" ADDED DIMENSION CK:JB 10/15/02 CK:MBW