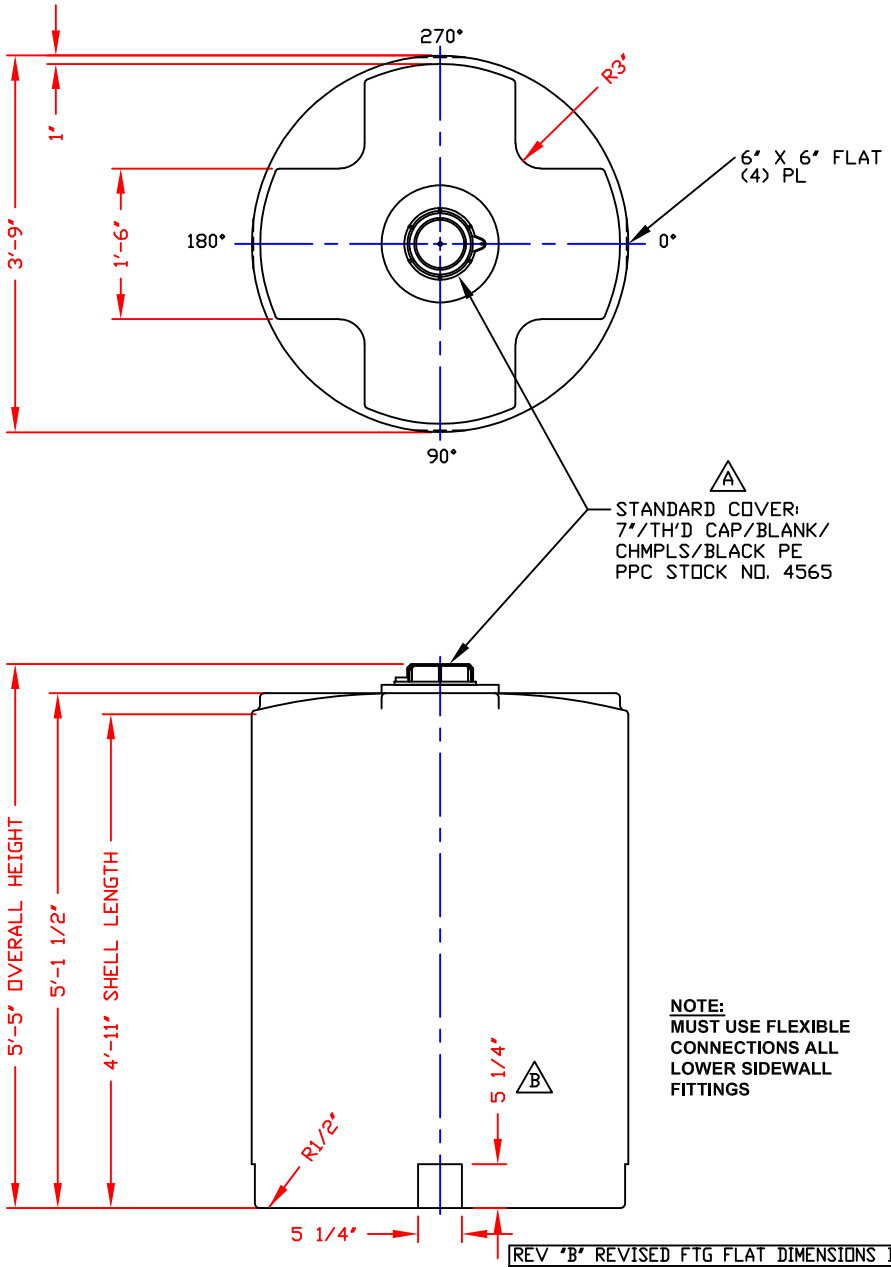

NOTE:
MUST USE FLEXIBLE CONNECTIONS ALL LOWER SIDEWALL FITTINGS

NOZZLE SCHEDULE & ACCESSORIES

SERVICE	MK	STOCK NO.	SIZE	FITTING	DEG	ELEV

NOTES
1. THIS IS A COMPUTER GENERATED DWG. DO NOT REVISE BY HAND.
2. DIMENSIONS WILL VARY ±3% DUE TO VARIATIONS IN MULTIPLE MOLDS & CONDITIONS PREVALANT DURING MANUFACTURE & USAGE.
3. NO MOLDED IN GALLONAGE MARKERS THIS TANK.

CALCULATED CAPACITIES/ VOLUME IN U.S. GALLONS		
DESIGN CAP	DOME VOL	TOTAL VOL
399	7	406

CONFIDENTIAL PROPERTY OF POLY PROCESSING COMPANY NOT FOR REPRINT OR USE WITHOUT PERMISSION

DWG TITLE: 400 GALLON UPRIGHT TANK

SCALE: 3/4"=1'-0"

DATE: 10/8/19

PolyProcessing
SOLUTIONS, SIMPLIFIED.
Central Region
P.O. Box 4159 (71211)
2201 Old Sterlington Rd.
Monroe, LA 71203
(318) 343-7565
FAX (318) 343-8795

DR: B. HARPER

CK:

SHEET: 1 OF 1

COMPUTER FILE: VERT-00400

REV: B

REV "B" REVISED FTG FLAT DIMENSIONS BY:JB 8/3/16 CK:WM
REV "A" REVISED COVER BY:JB 7/26/09 CK:WM

B-75