NON-CONTROLLED COPY

INFORMATION SUBJECT TO CHANGE WITHOUT NOTICE

VERIFY REV LEVEL OF PAPER COPY WITH REV LEVEL ON PPC WEB SITE

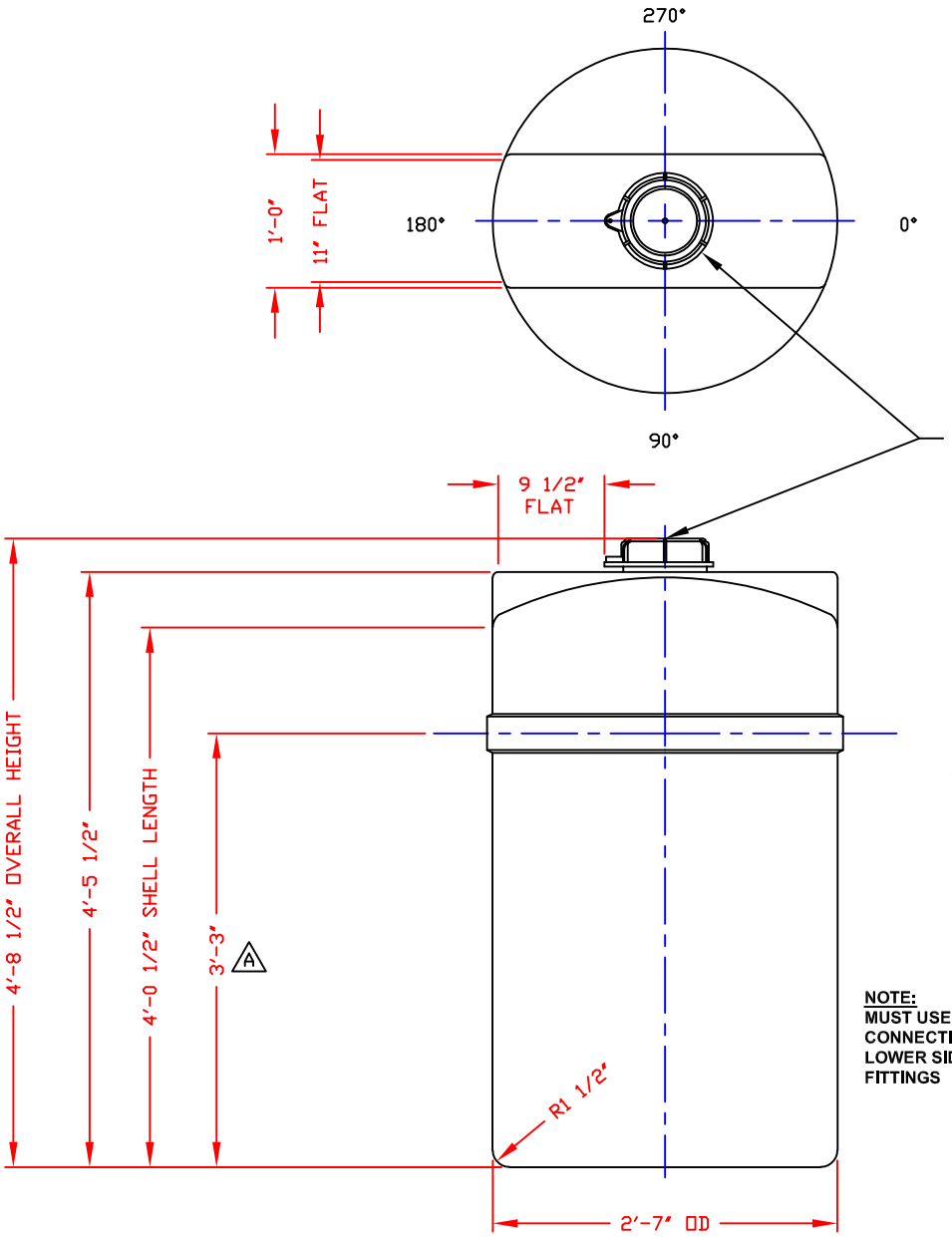

STANDARD COVER:
7"/TH'D CAP/BLANK/
CHMPLS/BLACK PE
PPC STOCK NO. 4565
OPTIONAL GASKETS:
7"/TH'D CAP GSKT/CMPLAS/EPDM
PPC STOCK NO. 5342
7"/TH'D CAP GSKT/CMPLAS/BLACK VITON
PPC STOCK NO. 5343
OPTIONAL COVER:
8"/LID W/RIM VENTED/BLACK PP
PPC STOCK NO. 4802

NOTE:
MUST USE FLEXIBLE CONNECTIONS ALL LOWER SIDEWALL FITTINGS

C

NOZZLE SCHEDULE & ACCESSORIES

SERVICE	MK	STOCK NO.	SIZE	FITTING	DEG	ELEV

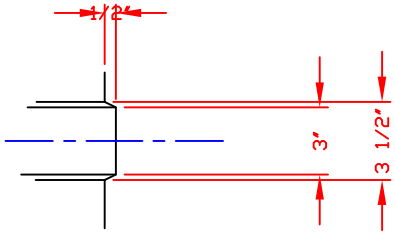

DETAIL "A"
STIFFENER BAND
SCALE: 2"=1'-0"

NOTE: STIFFNER BAND AVAILABLE ON EASTERN REGION TANK ONLY

NOTES
1. THIS IS A COMPUTER GENERATED DWG. DO NOT REVISE BY HAND.
2. 4 1/2" WIDE MOLDED IN GALLONAGE MARKERS @ 0° IN 25 GAL. INCREMENTS UP TO 125 GAL - CENTRAL REGION ONLY. AVOID WHEN PLACING FITTINGS.
3. DIMENSIONS WILL VARY ±3% DUE TO VARIATIONS IN MULTIPLE MOLDS & CONDITIONS PREVALENT DURING MANUFACTURE & USAGE.

CALCULATED CAPACITIES/ VOLUME IN U.S. GALLONS		
DESIGN CAP	DOME VOL	TOTAL VOL
156	7	163

CONFIDENTIAL PROPERTY OF POLY PROCESSING COMPANY NOT FOR REPRINT OR USE WITHOUT PERMISSION

DWG TITLE: 155 GALLON UPRIGHT TANK

SCALE: 1"=1'-0"

DATE: 10/8/19

POLYPROCESSING COMPANY

Central Region
P.O. Box 4159 (71211)
2201 Old Sterlington Rd.
Monroe, LA 71203
(318) 343-7565
FAX (318) 343-8795

DR: B. HARPER

CK: D. RECTOR

SHEET: 1 OF 1

COMPUTER FILE: VERT-00155

REV: C

REV "C" ADDED FITTING NOTE BY:MBW 2/11/03 CK:JB
REV "B" REMOVED "EASTERN REGION ONLY" NOTE DR:JB 8/13/01 CK:MBW
REV "A" DID SAY "3'-6"" DR:MBW 7/12/00 CK:JB

B1