NON-CONTROLLED COPY
INFORMATION SUBJECT TO CHANGE WITHOUT NOTICE
VERIFY REV LEVEL OF PAPER COPY WITH REV LEVEL ON PPC WEB SITE

NOZZLE SCHEDULE & ACCESSORIES

SERVICE	MK	STOCK NO.	SIZE	FITTING	DEG	ELEV

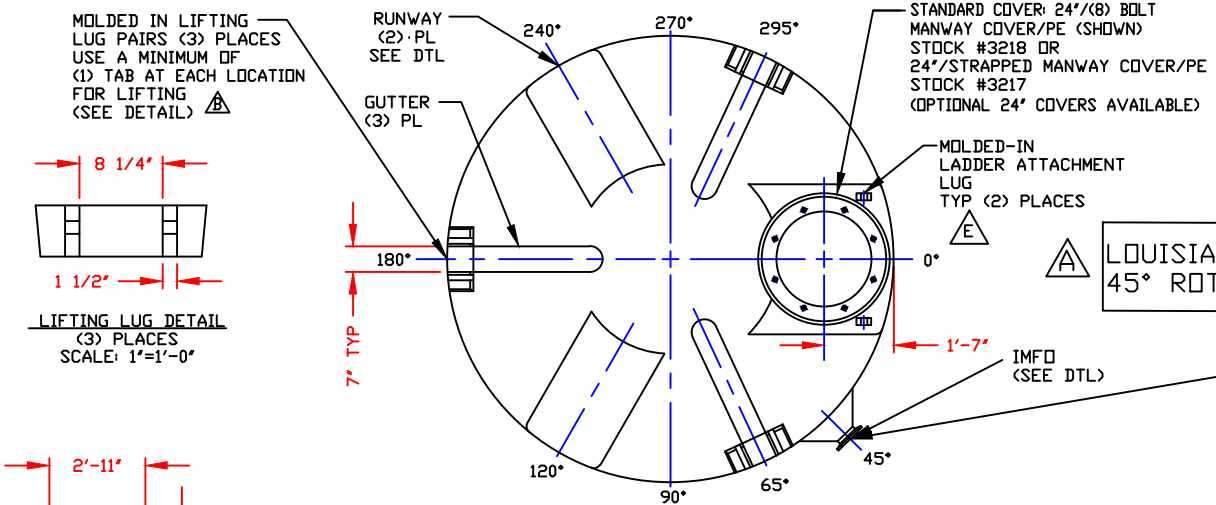

A

LOUISIANA PLANT IMFO LOCATION: 45° ROTATE EVERY 5°	VIRGINIA PLANT IMFO LOCATION: 50° ROTATE EVERY 7.2°

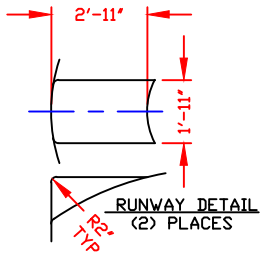

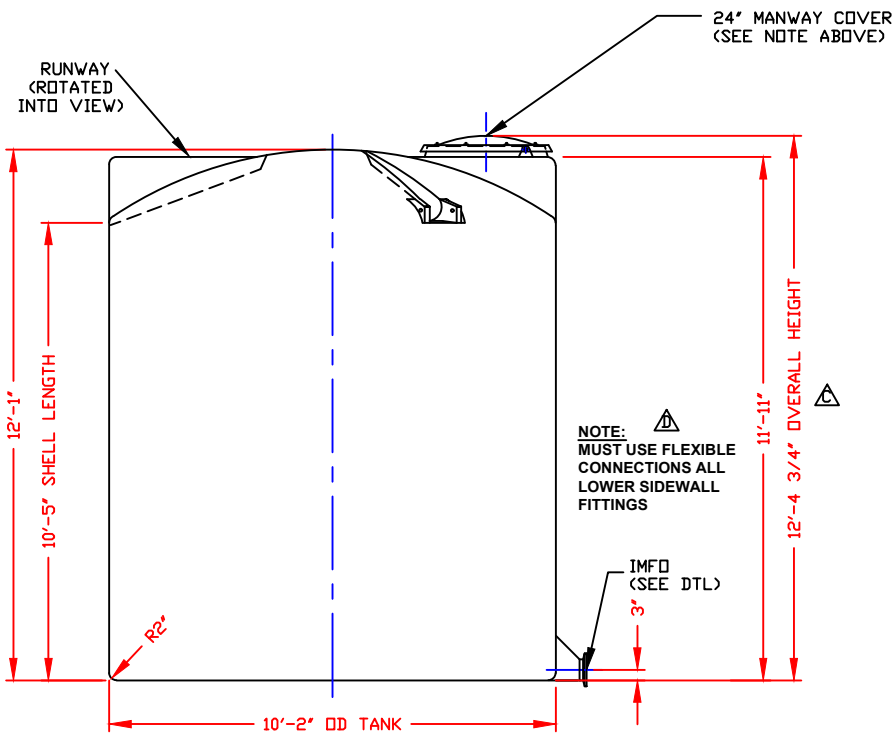

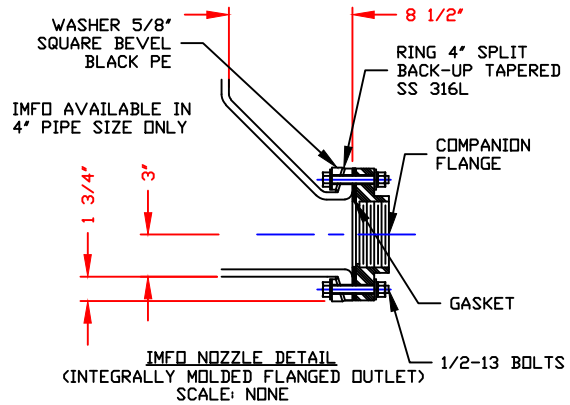

NOTES
1. THIS IS A COMPUTER GENERATED DWG. DO NOT REVISE BY HAND.
2. MOLDED IN GALLONAGE MARKERS ON SIDEWALL IN 200 GAL INCREMENTS UP TO 5800 GAL.
3. DIMENSIONS WILL VARY ±3% DUE TO VARIATIONS IN MULTIPLE MOLDS & CONDITIONS PREVALENT DURING MANUFACTURE & USAGE.

CALCULATED CAPACITIES/ VOLUME IN U.S. GALLONS		
DESIGN CAP	DOME VOL	TOTAL VOL
6198	419	6617

CONFIDENTIAL PROPERTY OF POLY PROCESSING COMPANY NOT FOR REPRINT OR USE WITHOUT PERMISSION

DWG TITLE: 6150 GALLON IMFO TANK

SCALE: 3/8"=1'-0"
DATE: 09/19/19

POLYPROCESSING SOLUTIONS, SIMPLIFIED.
Central Region
P.O. Box 4150 (71211)
2281 Old Sterlington Rd.
Monroe, LA 71203
(318) 343-7565
FAX (318) 343-8795

DR: B. HARPER
CK:

SHEET 1 OF 1 | COMPUTER FILE IMFO-F-06150 | REV F

REV "A" ADDED INFO LOCATION BY:MBW 2/22/00 CK:DR
REV "B" ADDED LIFTING LUGGS & DETAIL BY:JB 4/12/02 CK:MBW
REV "C" ADDED DIMENSION BY:JB 10/21/02 CK:MBW
REV "D" ADDED FITTING NOTE BY:MBW 3/3/03 CK:JB
REV "E" ADDED LADDER ATTACHMENT LUGS BY:JB 9/10/04 CK:WM
REV "F" RELOCATED GUTTERS BY:JB 1/24/11 CK:WM