NON-CONTROLLED COPY

INFORMATION SUBJECT TO CHANGE WITHOUT NOTICE

VERIFY REV LEVEL OF PAPER COPY WITH REV LEVEL ON PPC WEB SITE

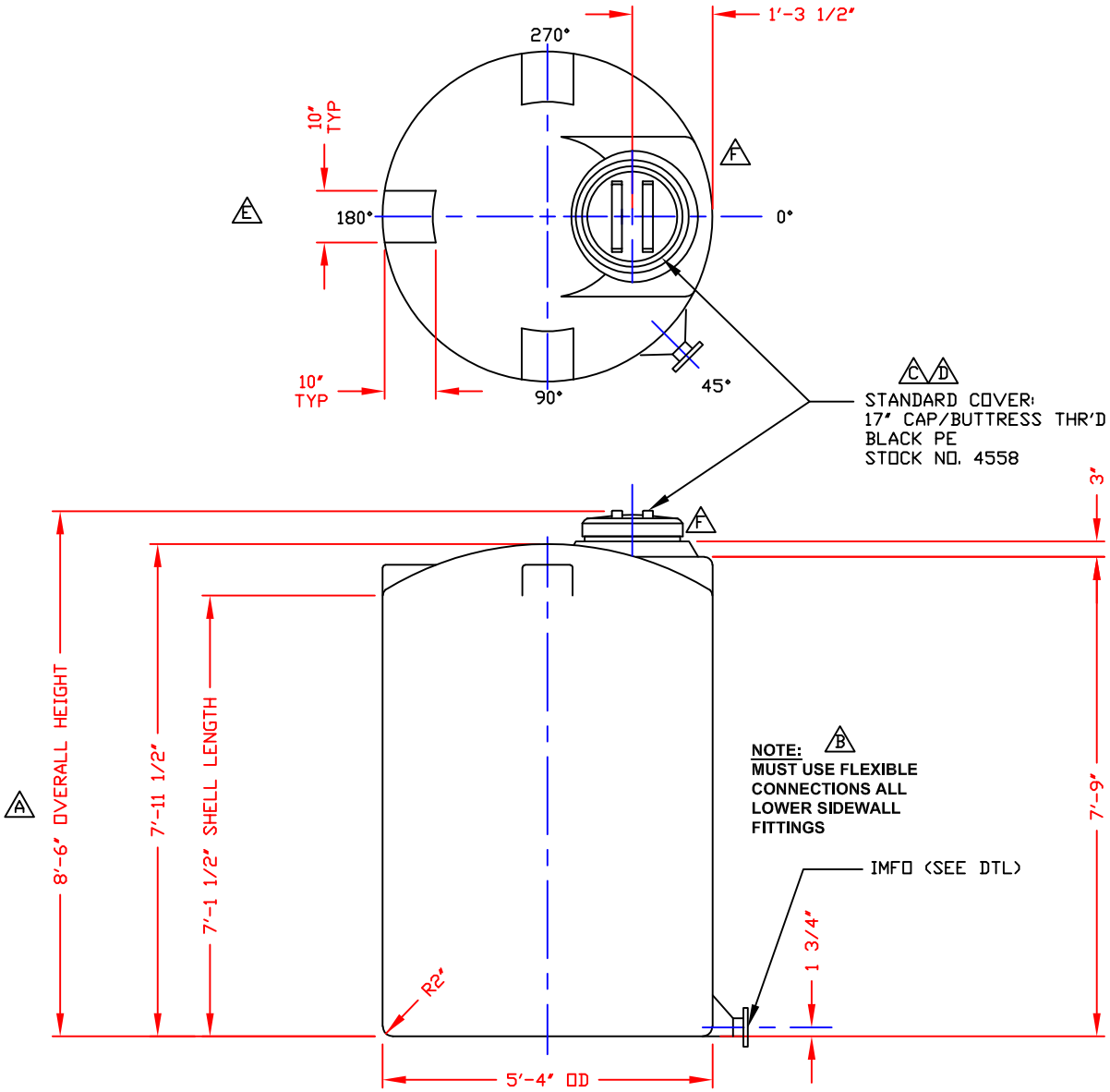

NOZZLE SCHEDULE & ACCESSORIES

SERVICE	MK	STOCK NO.	SIZE	FITTING	DEG	ELEV

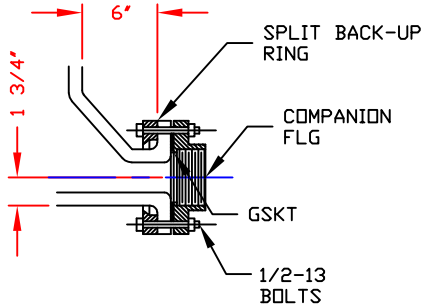

IMFO DETAIL

(INTEGRALLY MOLDED
FLANGED OUTLET)
SCALE: NONE

NOTES

1. THIS IS A COMPUTER GENERATED DWG. DO NOT REVISE BY HAND.
2. DIMENSIONS WILL VARY ±3% DUE TO VARIATIONS IN MULTIPLE MOLDS & CONDITIONS PREVALENT DURING MANUFACTURE & USAGE.
3. MOLDED IN GALLONAGE MARKERS IN MANWAY AREA IN 100 GAL INCREMENTS UP TO 1200 GAL AVOID WHEN PLACING FITTINGS

CALCULATED CAPACITIES/ VOLUME IN U.S. GALLONS

DESIGN CAP	DOME VOL	TOTAL VOL
1181	61	1242

CONFIDENTIAL PROPERTY OF POLY PROCESSING COMPANY NOT FOR REPRINT OR USE WITHOUT PERMISSION

REV "F" REVISE MANWAY WIDTH BY:BT 01/10/19 CK:WM	
REV "E" ADDED FTG FLAT TO DOME BY:JB 12/31/12 CK:WM	
REV "D" REVISED COVER BY:JB 7/27/09 CK:WM	
REV "C" REVISED LID BY:MBW 3/3/03 CK:JB	
REV "C" ADDED FITTING NOTE BY:MBW 3/3/03 CK:JB	
REV "A" ADDED DIMENSION BY:JB 10/15/02 CK:MBW	

DWG TITLE: 1150 GALLON IMFO TANK

SCALE: 1/2"=1'-0"

DATE: 09/19/19

POLYPROCESSING SOLUTIONS, SIMPLIFIED.
Central Region
P.O. Box 4159 (71211)
2201 Old Sterlington Rd.
Monroe, LA 71203
(318) 343-7565
FAX (318) 343-8795

DR: B. HARPER

CK:

SHEET	COMPUTER FILE	REV
1 OF 1	IMFO-F-01150	F

B-5