NON-CONTROLLED COPY

INFORMATION SUBJECT TO CHANGE WITHOUT NOTICE

VERIFY REV LEVEL OF PAPER COPY WITH REV LEVEL ON PPC WEB SITE

REV "A" ADDED DIMENSION BY:JB 10/15/02 CK:MBW
REV "B" ADDED NOTE TO DETAIL BY:MBW 1/7/03 CK:JB
REV "C" ADDED FITTING NOTE BY:MBW 3/3/03 CK:JB
REV "D" REVISED LID BY:MBW 3/3/03 CK:JB
REV "E" REVISED INFO INFORMATION BY:MBW 3/24/04 CK:WM
REV "F" ADDED DOME FLATS/REV CAP BY:JB 9/6/15

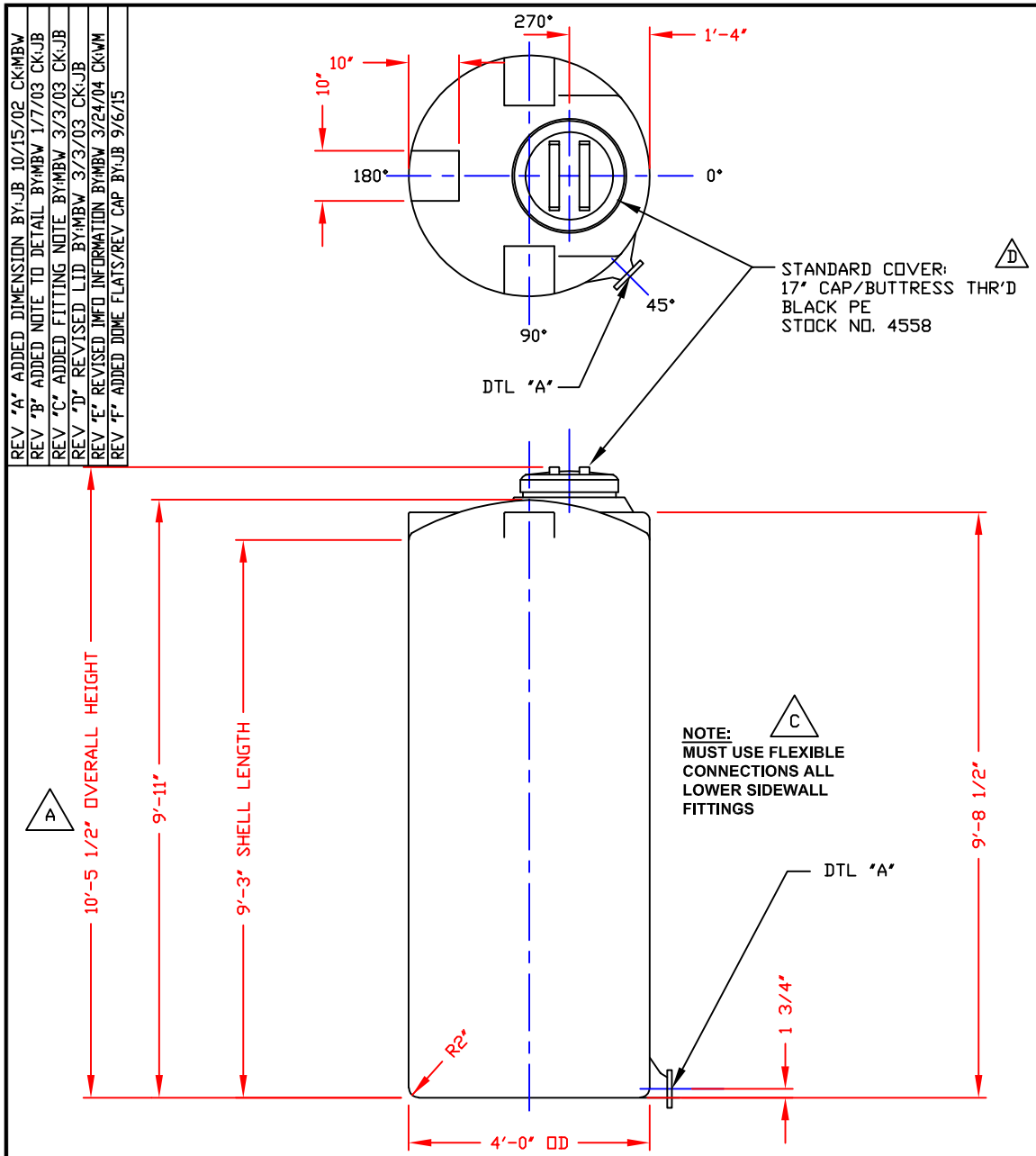

NOZZLE SCHEDULE & ACCESSORIES

SERVICE	MK	STOCK NO.	SIZE	FITTING	DEG	ELEV

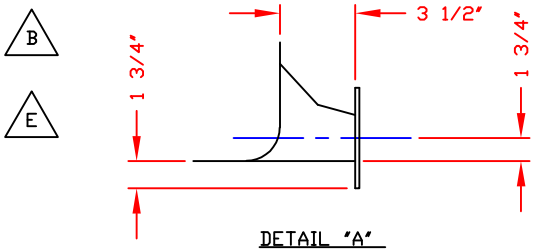

DETAIL "A"
3" ONLY
(INTEGRALLY MOLDED FLANGED OUTLET)
SCALE: 1 1/2"=1'-0"

NOTES
1. THIS IS A COMPUTER GENERATED DWG. DO NOT REVISE BY HAND.
2. DIMENSIONS WILL VARY ±3% DUE TO VARIATIONS IN MULTIPLE MOLDS & CONDITIONS PREVALENT DURING MANUFACTURE & USAGE.
3. MOLDED IN GALLONAGE MARKERS IN MANWAY AREA IN 50 GAL INCREMENTS UP TO 800 GAL.

CALCULATED CAPACITIES/ VOLUME IN U.S. GALLONS

DESIGN CAP	DOME VOL	TOTAL VOL
854	25	879

CONFIDENTIAL PROPERTY OF POLY PROCESSING COMPANY NOT FOR REPRINT OR USE WITHOUT PERMISSION

DWG TITLE: 850 GALLON IMFO TANK

SCALE: 1/2"=1'-0"

DATE: 09/19/19

POLYPROCESSING COMPANY

Central Region
P.O. Box 4159 (71211)
2201 Old Sterlington Rd.
Monroe, LA 71203
(318) 343-7565
FAX (318) 343-8795

DR: B. HARPER

CK:

SHEET: 1 OF 1

COMPUTER FILE: IMFO-F-00850

REV: F

B-5