NON-CONTROLLED COPY
INFORMATION SUBJECT TO CHANGE WITHOUT NOTICE
VERIFY REV LEVEL OF PAPER COPY WITH REV LEVEL ON PPC WEB SITE

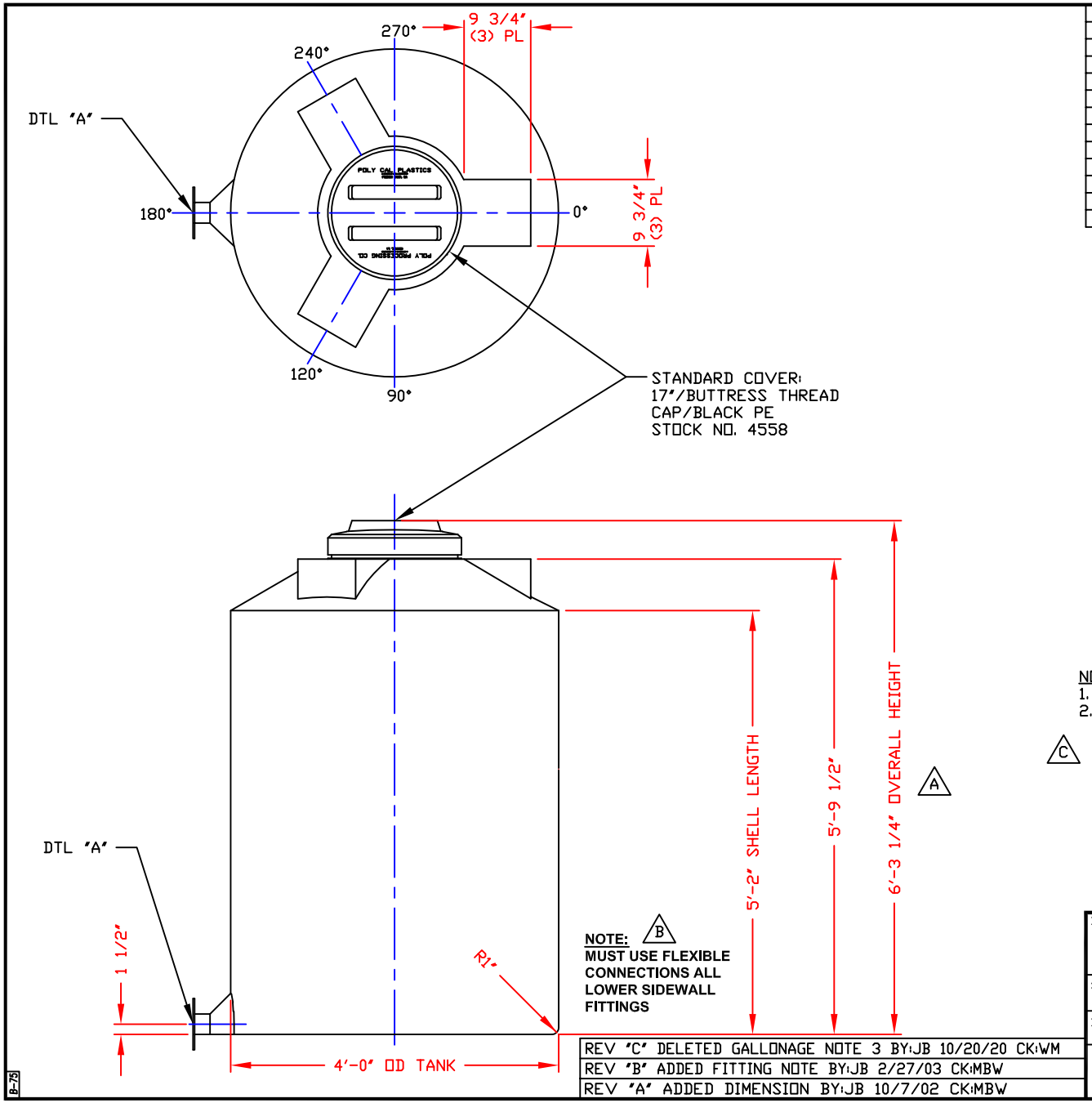

NOZZLE SCHEDULE & ACCESSORIES

SERVICE	MK	STOCK NO.	SIZE	FITTING	DEG	ELEV

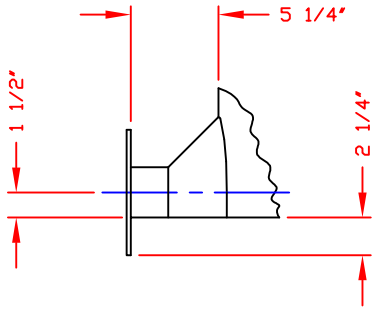

DETAIL "A"
(INTEGRALLY MOLDED FLANGE OUTLET)
AVAILABLE IN 3" SIZE ONLY
SCALE: 1 1/2"=1'-0"

NOTES
1. THIS IS A COMPUTER GENERATED DWG. DO NOT REVISE BY HAND.
2. DIMENSIONS WILL VARY ±3% DUE TO VARIATIONS IN MULTIPLE MOLDS & CONDITIONS PREVALENT DURING MANUFACTURE & USAGE.

CALCULATED CAPACITIES/ VOLUME IN U.S. GALLONS		
DESIGN CAP	DOME VOL	TOTAL VOL
478	35	513

CONFIDENTIAL PROPERTY OF POLY PROCESSING COMPANY NOT FOR REPRINT OR USE WITHOUT PERMISSION

DWG TITLE: 475 GALLON IMFO TANK			
SCALE: 3/4"=1'-0"	PolyProcessing SOLUTIONS, SIMPLIFIED.	Central Region P.O. Box 4150 (71211) 2201 Old Sterlington Rd. Monroe, LA 71203 (318) 343-7565 FAX (318) 343-8795	DR: B. HARPER
DATE: 09/18/19			CK:
	SHEET 1 OF 1	COMPUTER FILE IMFO-F-00475	REV C

REV "C" DELETED GALLONAGE NOTE 3 BY:JB 10/20/20 CK:WM
REV "B" ADDED FITTING NOTE BY:JB 2/27/03 CK:MBW
REV "A" ADDED DIMENSION BY:JB 10/7/02 CK:MBW

B-75