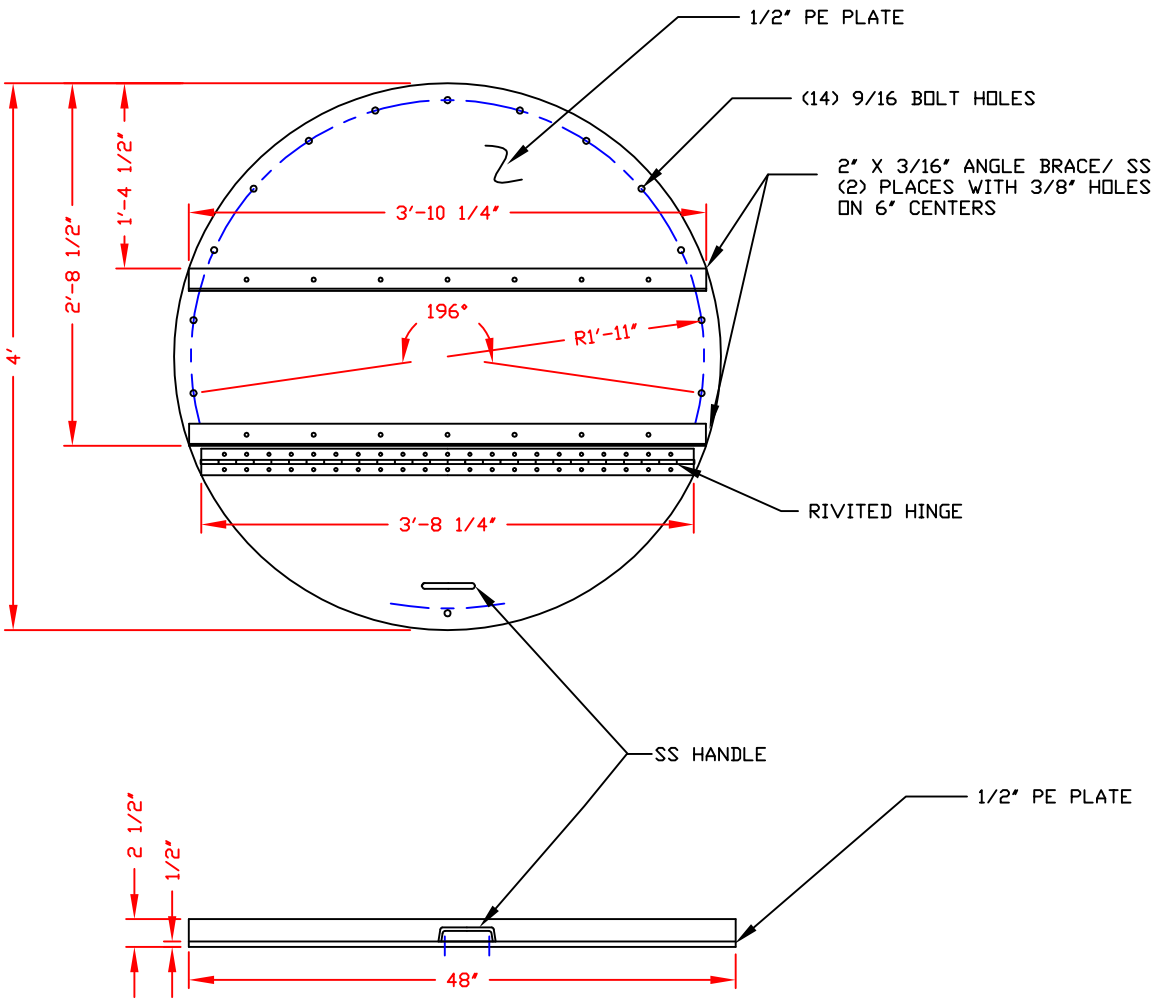

BILL OF MATERIALS

NO.	DESCRIPTION	DESCRIPTION 2	UNITS	QUANTITY
8842	PLATE 48" DIA. F/OT	1/2" PE	EA	1
8884	BRACING 2" X 2" X 3/16" ANGLE	SS W- 3/8" DIA BH ON 6" CTR'S.	IN	93
8881	HINGE 2" OPEN WIDTH PIANO	SS	IN	44
8882	HANDLE F/OT CVRS	SS	EA	1
8335	BOLT 1/2" X 2 1/8"	FLT HD SLOTTED BLK PE	EA	14
9245	WASHER 1/4" FLAT	SS	EA	28
9246	WASHER 1/4" LOCK	SS	EA	14
9247	NUT 1/4"-20 HEX	SS	EA	14
9248	BOLT 1/4-20 X 2" HEX HD	SS	EA	14
8866	GSKT 48" OD X 40" ID	3/8" PE	EA	1

CONFIDENTIAL PROPERTY OF
POLY PROCESSING COMPANY
NOT FOR REPRINT OR USE
WITHOUT PERMISSION

DWG TITLE: 48 IN DIAMETER OPEN TOP HINGED LID

SCALE: 1"=1'-0"

DATE: 8/7/2007

POLYPROCESSING COMPANY

Central Region
P.O. Box 4159 (71211)
2201 Old Sterlington Rd.
Monroe, LA 71203
(318) 343-7565
FAX (318) 343-8795

DR: B.DUMAS

CK: XXXXXXXX

SHEET	COMPUTER FILE	REV
1 OF 1	9398	-

B1