NON-CONTROLLED COPY

INFORMATION SUBJECT TO CHANGE WITHOUT NOTICE

VERIFY REV LEVEL OF PAPER COPY WITH REV LEVEL ON PPC WEB SITE

NOZZLE SCHEDULE & ACCESSORIES

SERVICE	MK	STOCK NO.	SIZE	FITTING	DEG	ELEV

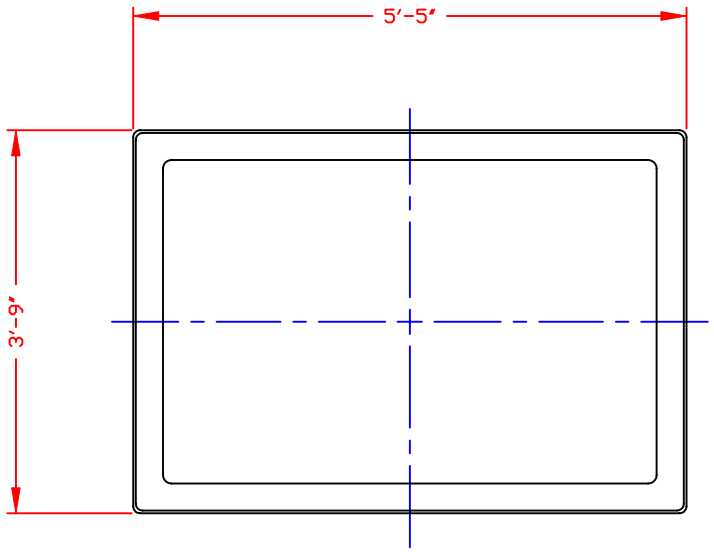

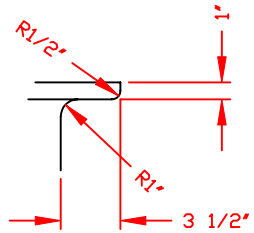

DETAIL "A"
SCALE: 1 1/2"=1'-0"

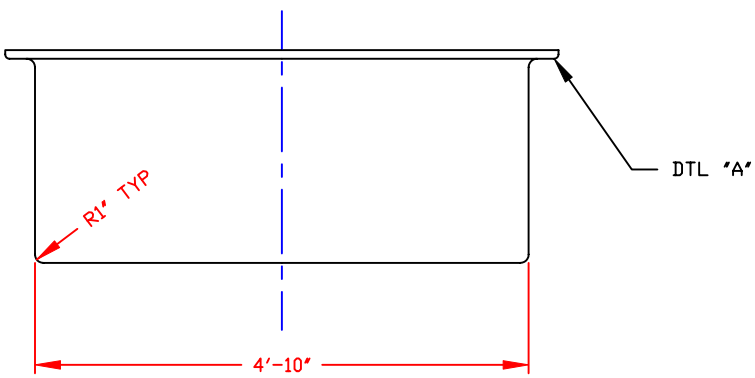

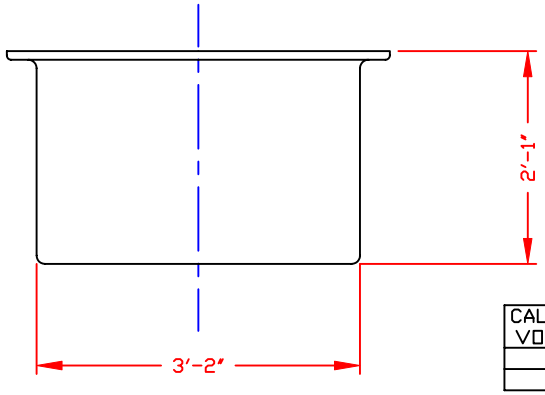

NOTES
1. THIS IS A COMPUTER GENERATED DWG. DO NOT REVISE BY HAND.
2. DIMENSION WILL VARY ±3% DUE TO VARIATIONS IN MULTIPLE MOLDS & CONDITIONS PREVALENT DURING MANUFACTURE & USAGE.

CALCULATED CAPACITIES/ VOLUME IN U.S. GALLONS
DESIGN CAPACITY
225

CONFIDENTIAL PROPERTY OF POLY PROCESSING COMPANY NOT FOR REPRINT OR USE WITHOUT PERMISSION

NOTE:
CAPACITIES OF RECTANGULAR SECONDARY CONTAINMENT BASINS MAY BE SIGNIFICANTLY LESS THAN NOMINAL VOLUME WITHOUT ADEQUATE EXTERNAL SUPPORT.

DWG TITLE: 225 GALLON RECTANGULAR SECONDARY CONTAINMENT

SCALE: 3/4"=1'-0"

DATE: 12/30/99

POLYPROCESSING COMPANY
Central Region
P.O. Box 4150 (71211)
2201 Old Sterlington Rd.
Monroe, LA 71203
(318) 343-7565
FAX (318) 343-6795

DR: MB WILKERSON

CK: J. BRANTLEY

SHEET	COMPUTER FILE	REV
1 OF 1	5100225	-

B-75