NON-CONTROLLED COPY	COPY ISSUED BY_____.
INFORMATION SUBJECT TO CHANGE WITHOUT NOTICE	
COPY WILL NOT BE UPDATED	COPY ISSUED ON_____.

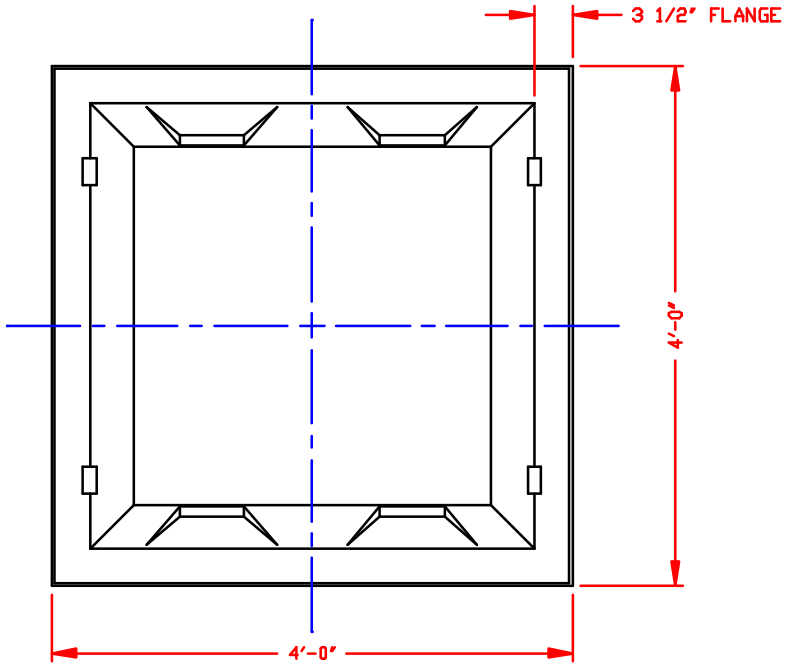

NOZZLE SCHEDULE & ACCESSORIES						
SERVICE	MK	STOCK NO.	SIZE	FITTING	DEG	ELEV

NOTES
1. THIS IS A COMPUTER GENERATED DWG. DO NOT REVISE BY HAND.
2. DIMENSIONS WILL VARY ±3% DUE TO VARIATIONS IN MULTIPLE MOLDS & CONDITIONS PREVALENT DURING MANUFACTURE & USAGE.
3. NO MOLDED IN GALLONAGE MARKERS THIS TANK.

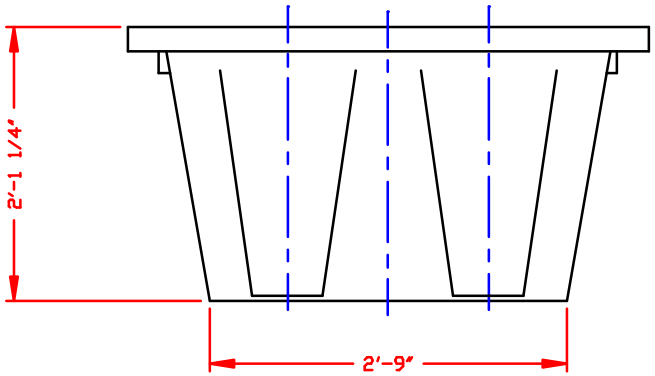

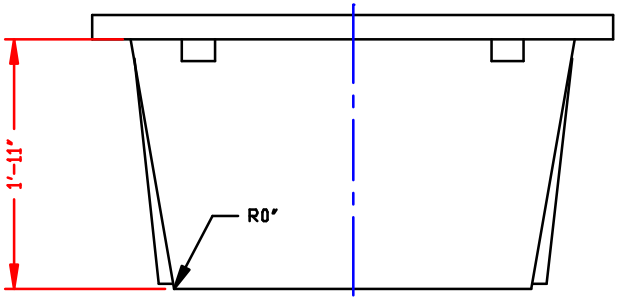

CALCULATED CAPACITY VOLUME IN U.S. GALLONS
DESIGN CAPACITY
136

CONFIDENTIAL PROPERTY OF POLY PROCESSING COMPANY NOT FOR REPRINT OR USE WITHOUT PERMISSION

NOTE: CAPACITIES OF RECTANGULAR SECONDARY CONTAINMENT BASINS MAY BE SIGNIFICANTLY LESS THAN NOMINAL VOLUME WITHOUT ADEQUATE EXTERNAL SUPPORT.

DWG TITLE	135 GALLON SQUARE CONTAINMENT TANK (NESTABLE)		
SCALE: 1"=1'-0"	POLY PROCESSING Company	DR: MB WILKERSON	
DATE: 6/23/00		CK: J. BRANTLEY	
	SHEET 1 OF 1	COMPUTER FILE 15300135	REV -