NON-CONTROLLED COPY

INFORMATION SUBJECT TO CHANGE WITHOUT NOTICE

VERIFY REV LEVEL OF PAPER COPY WITH REV LEVEL ON PPC WEB SITE

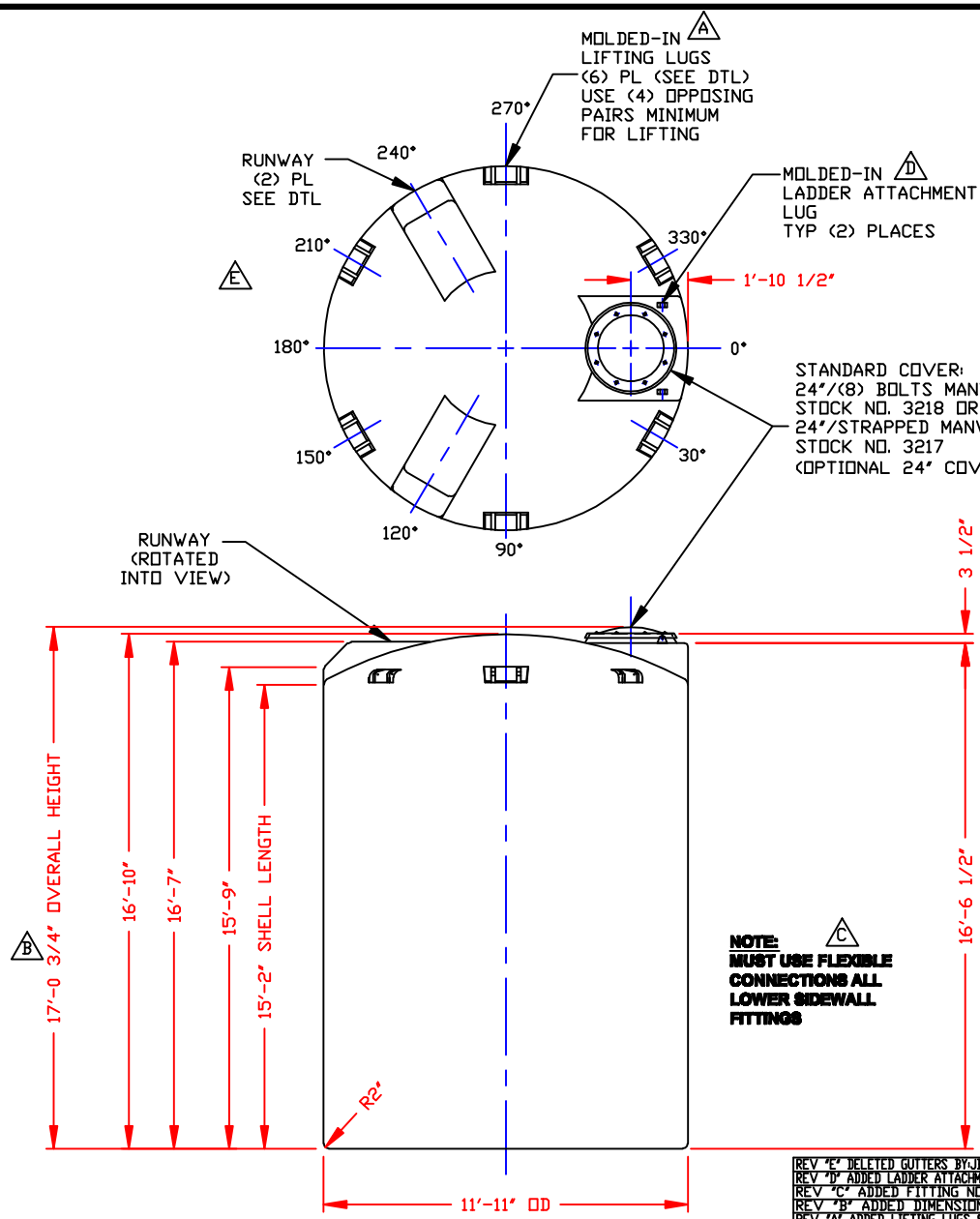

NOZZLE SCHEDULE & ACCESSORIES

SERVICE	MK	STOCK NO.	SIZE	FITTING	DEG	ELEV

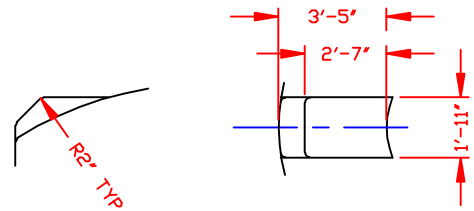

RUNWAY DETAIL
(2) PLACES

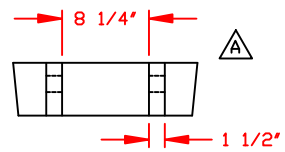

LIFTING LUG DETAIL
(6) PLACES
SCALE: 1"=1'-0"

NOTES:
1. THIS IS A COMPUTER GENERATED DWG. DO NOT REVISE BY HAND.
2. DIMENSIONS WILL VARY ±3% DUE TO VARIATIONS IN MULTIPLE MOLDS & CONDITIONS PREVALENT DURING MANUFACTURE & USAGE.
3. MOLDED IN GALLONAGE MARKERS @ APPROX 5" UP TO 11200 GAL.

CALCULATED CAPACITIES/ VOLUME IN U.S. GALLONS		
DESIGN CAP	DOME VOL	TOTAL VOL
12281	675	12956

CONFIDENTIAL PROPERTY OF POLY PROCESSING COMPANY NOT FOR REPRINT OR USE WITHOUT PERMISSION

DWG TITLE: 12250 GALLON UPRIGHT TANK

SCALE: 1/4"=1'-0"

DATE: 10/8/99

POLYPROCESSING COMPANY LLC

Central Region
P.O. Box 4150 (71211)
2224 Old Sterlington Rd.
Monroe, LA 71203
(318) 343-7565
FAX (318) 343-8795

DR: MB WILKERSON

CK: J. BRANTLEY

SHEET: 1 OF 1

COMPUTER FILE: 1012250

REV: E

REV "E" DELETED GUTTERS BY:JB 4/8/09 CK:WM
REV "D" ADDED LADDER ATTACHMENT LUGS BY:JB 1/25/05 CK:WM
REV "C" ADDED FITTING NOTE BY:MBW 2/17/03 CK:JB
REV "B" ADDED DIMENSION BY:JB 10/22/02 CK:MBW
REV "A" ADDED LIFTING LUGS & DETAIL BY:JB 6/5/02 CK:WM

B-25