NON-CONTROLLED COPY

INFORMATION SUBJECT TO CHANGE WITHOUT NOTICE

VERIFY REV LEVEL OF PAPER COPY WITH REV LEVEL ON PPC WEB SITE

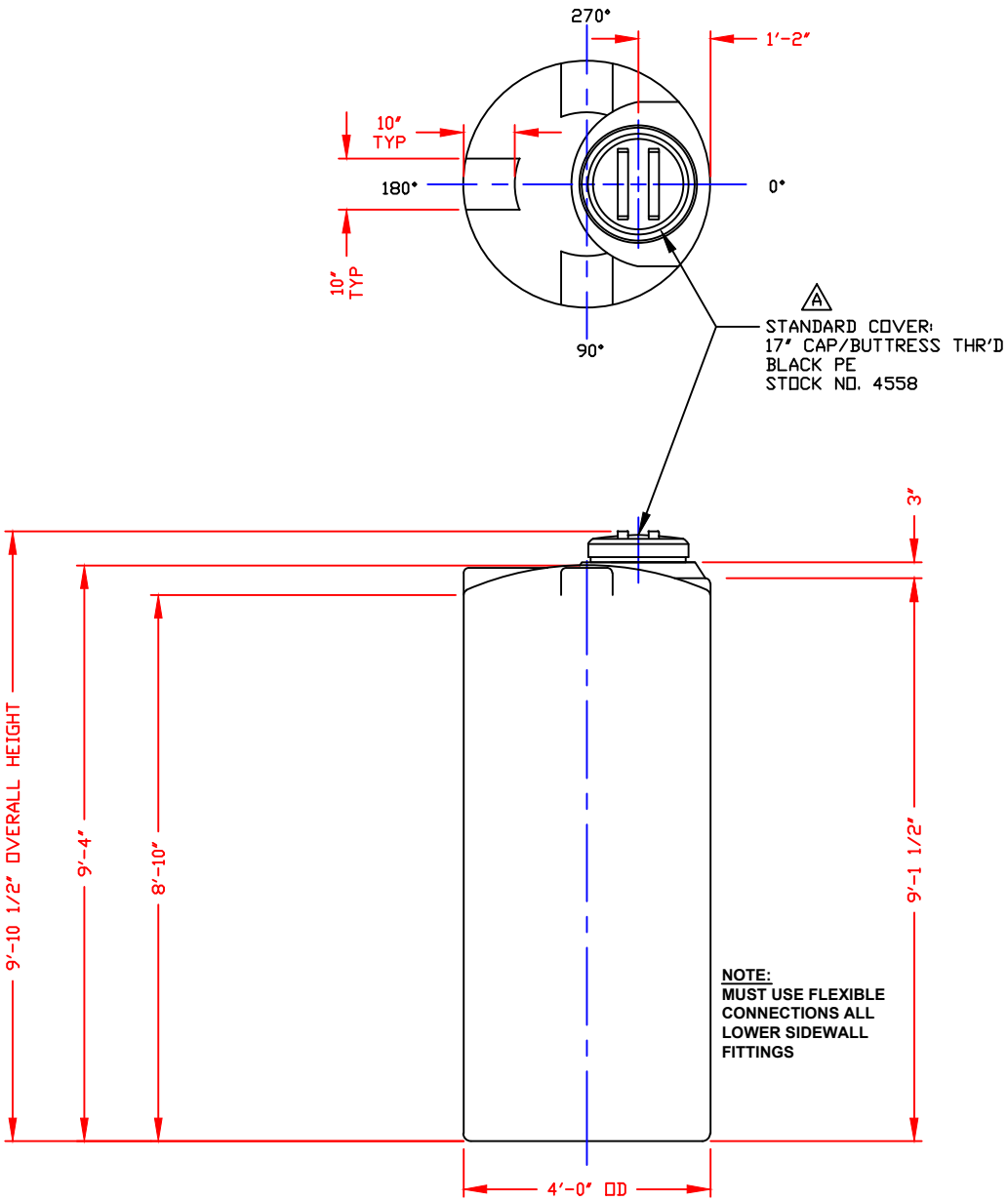

NOZZLE SCHEDULE & ACCESSORIES

SERVICE	MK	STOCK NO.	SIZE	FITTING	DEG	ELEV

NOTES:
1. THIS IS A COMPUTER GENERATED DWG. DO NOT REVISE BY HAND.
2. DIMENSIONS WILL VARY ±3% DUE TO VARIATIONS IN MULTIPLE MOLDS & CONDITIONS PREVALENT DURING MANUFACTURE & USAGE.
3. MOLDED IN GALLONAGE MARKERS @ APPROX 10" IN 50 GAL INCREMENTS UP TO 700 GAL.

CALCULATED CAPACITIES/ VOLUME IN U.S. GALLONS		
DESIGN CAP	DOME VOL	TOTAL VOL
809	25	834

CONFIDENTIAL PROPERTY OF POLY PROCESSING COMPANY NOT FOR REPRINT OR USE WITHOUT PERMISSION

REV "B" ADDED FTG FLATS TO DOME BY:JB 1/11/13 CK:WM

REV "A" REVISED COVER BY:JB 7/24/09 CK:WM

DWG TITLE: 805 GALLON UPRIGHT TANK

SCALE: 1/2"=1'-0"

DATE: 7/24/09

POLYPROCESSING SOLUTIONS, SIMPLIFIED.

Central Region
P.O. Box 4150 (71211)
2224 Old Sterlington Rd.
Monroe, LA 71203
(318) 343-7565
FAX (318) 343-8795

DR: J. BRANTLEY

CK: C. DAVIES

SHEET	COMPUTER FILE	REV
1 OF 1	1000805V	B

B-5